1.2A 180KHz 70V Buck DC to DC Converter HM3107

Features

- Wide 10V to 70V Input Voltage Range
- Output Adjustable from 1.25V to 50V
- Maximum Duty Cycle 100%
- Minimum Drop Out 0.3V
- Fixed 180KHz Switching Frequency
- Maximum 1.2A Switching Current
- Internal Optimize Power MOSFET
- Recommend output power less than 10W
- High efficiency
- Excellent line and load regulation
- Built in thermal shutdown function
- Built in current limit function
- Built in output short protection function
- Available in SOP8L package

Applications

- Car Charger
- Battery Charger
- Ebike controller power supply
- Portable instrument power supply
- Telecom / Networking Equipment

General Description

The HM3107 is a 180KHz fixed frequency PWM buck (step-down) DC/DC converter, capable of driving a 1.2A load with high efficiency, low ripple and excellent line and load regulation. Requiring a minimum number of external components, the regulator is simple to use and include internal frequency compensation and a fixed-frequency oscillator.

The PWM control circuit is able to adjust the duty ratio linearly from 0 to 100%. An over current protection function is built inside. When short protection function happens, the operation frequency will be reduced from 180KHz to 36KHz. An internal compensation block is built in to minimize external component count.

Figure1. Package Type of HM3107

Pin Configurations

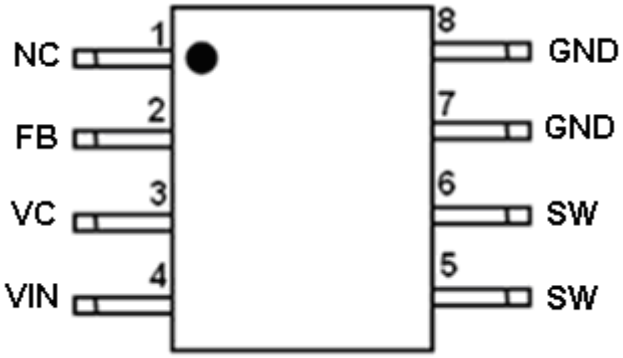

Figure2. Pin Configuration of HM3107 (Top View)

Table 1 Pin Description

Pin Number	Pin Name	Description
1	NC	No connected, hold floating;
2	FB	Feedback Pin (FB). Through an external resistor divider network, FB senses the output voltage and regulates it. The feedback threshold voltage is 1.25V.
3	VC	Internal Voltage Regulator Bypass Capacity. In typical system application, The VC pin connect a 1uf capacity to VIN.
4	VIN	Supply Voltage Input Pin. HM3107 operates from a 10V to 70V DC voltage. Bypass Vin to GND with a suitably large capacitor to eliminate noise on the input.
5,6	SW	Power Switch Output Pin (SW). SW is the switch node that supplies power to the output.
7,8	GND	Ground Pin. Care must be taken in layout. This pin should be placed outside of the Schottky Diode to output capacitor ground path to prevent switching current spikes from inducing voltage noise into HM3107.

Function Block

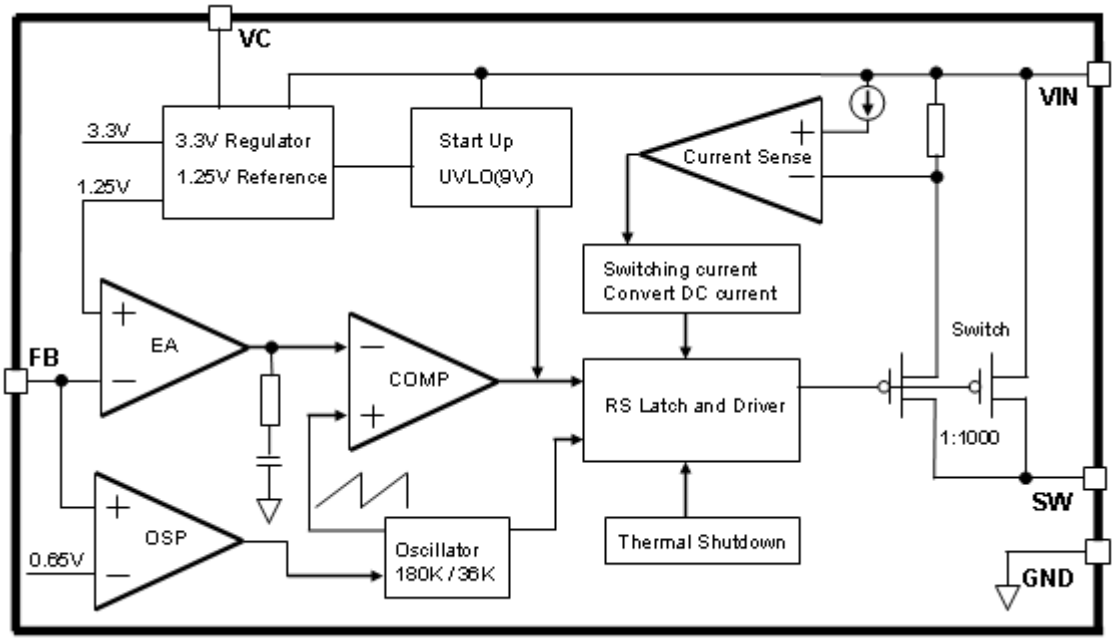

Figure3. Function Block Diagram of HM3107

Typical Application Circuit

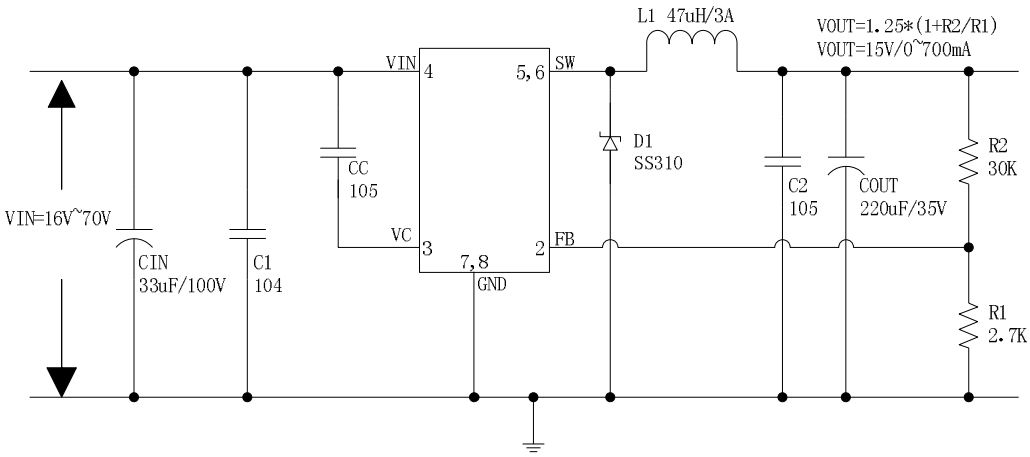

Figure4. HM3107 Typical Application Circuit (VIN=16V~70V, VOUT=15V/0.7A)

Ordering Information

Package	Temperature Range	Part Number	Marking ID	Packing Type
		Lead Free	Lead Free	
		HM3107	HM3107	2500 Units on Tape & Reel

Absolute Maximum Ratings（Note1）

Parameter	Symbol	Value	Unit
Input Voltage	Vin	-0.3 to 75	V
Feedback Pin Voltage	V_{FB}	-0.3 to Vin	V
Output Switch Pin Voltage	V_{Output}	-0.3 to Vin	V
Power Dissipation	P_D	Internally limited	mW
Thermal Resistance (SOP8L) (Junction to Ambient, No Heatsink, Free Air)	R_{JA}	100	ºC/W
Operating Junction Temperature	T_J	-40 to 125	ºC
Storage Temperature	T_{STG}	-65 to 150	ºC
Lead Temperature (Soldering, 10 sec)	T_{LEAD}	260	ºC
ESD (HBM)		>2000	V

Note1: Stresses greater than those listed under Maximum Ratings may cause permanent damage to the device. This is a stress rating only and functional operation of the device at these or any other conditions above those indicated in the operation is not implied. Exposure to absolute maximum rating conditions for extended periods may affect reliability.

HM3107 Electrical Characteristics

T_a = 25℃;unless otherwise specified.

Symbol	Parameter	Test Condition	Min.	Typ.	Max.	Unit
System parameters test circuit figure4						
VFB	Feedback Voltage	Vin = 16V to 70V, Vout=15V Iload=0.1A to 0.7A	1.225	1.25	1.275	V
Efficiency	η	Vin=36V ,Vout=15V Iout=0.7A	-	92	-	%
Efficiency	η	Vin=48V ,Vout=15V Iout=0.7A	-	89	-	%

Electrical Characteristics (DC Parameters)

Vin = 48V, GND=0V, Vin & GND parallel connect a 33uf/100V capacitor; Iout=100mA, T_a = 25℃; the others floating unless otherwise specified.

Parameters	Symbol	Test Condition	Min.	Typ.	Max.	Unit
Input operation voltage	Vin		10		70	V
Quiescent Supply Current	I_q	V_{FB} =Vin		3	5	mA
Oscillator Frequency	Fosc		144	180	216	KHz
Output Short Frequency	Fosp			36		KHz
Switch Current Limit	I_L	V_{FB} =0		1.3		A
Max. Duty Cycle	D_{MAX}	V_{FB}=0V		100		%
Output Power PMOS	Rdson	V_{FB}=0V, Vin=48V, I_{SW}=1A		180	210	mohm

Typical System Application (VOUT=15V/0.7A)

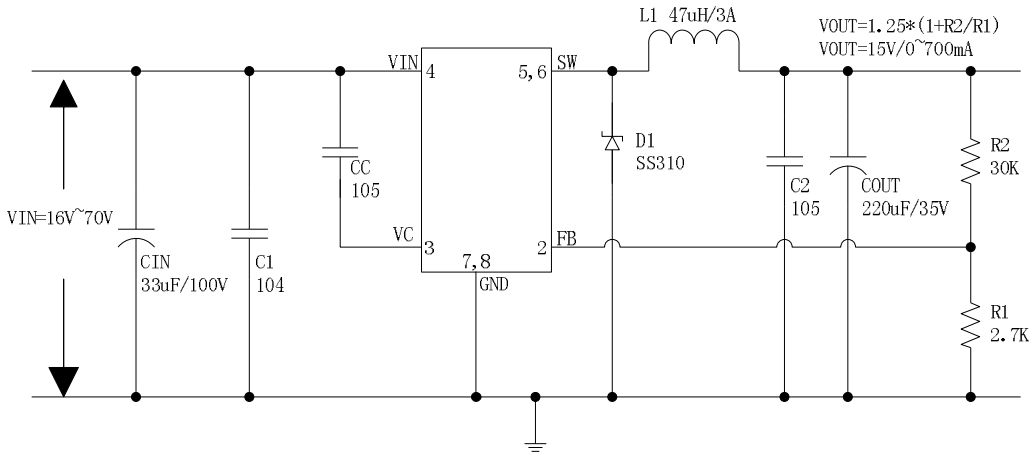

Figure5. HM3107 System Parameters Test Circuit (VIN=16V~70V, VOUT=15V/0.7A)

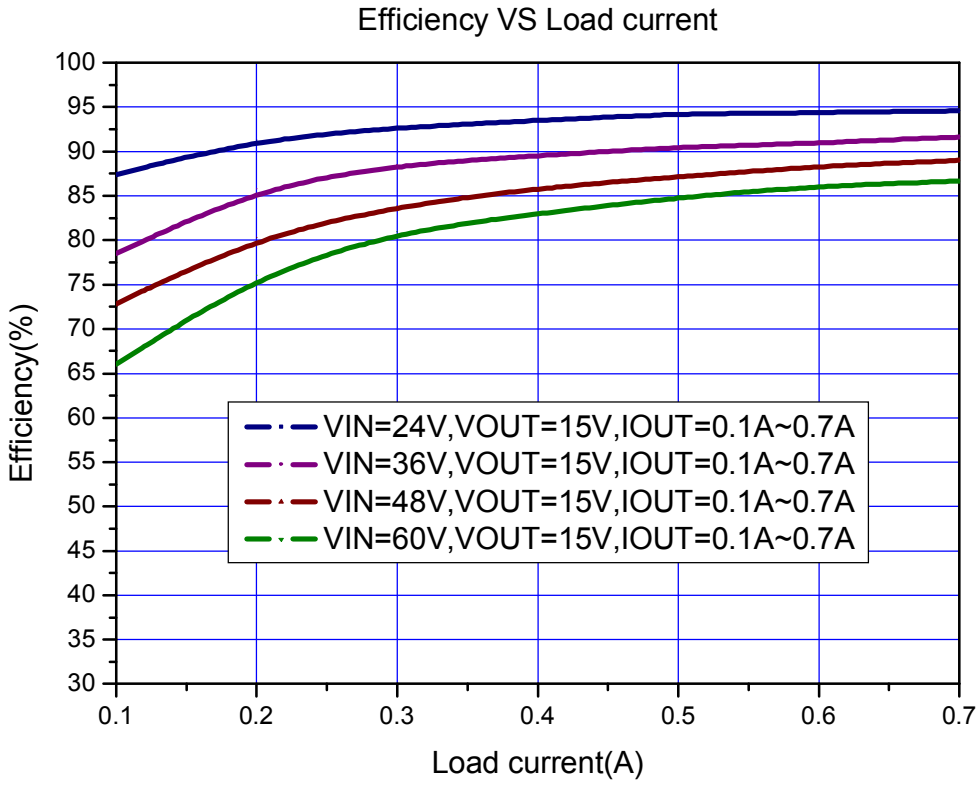

Figure6. HM3107 System Efficiency Curve

Typical System Application (VOUT=5V/1A)

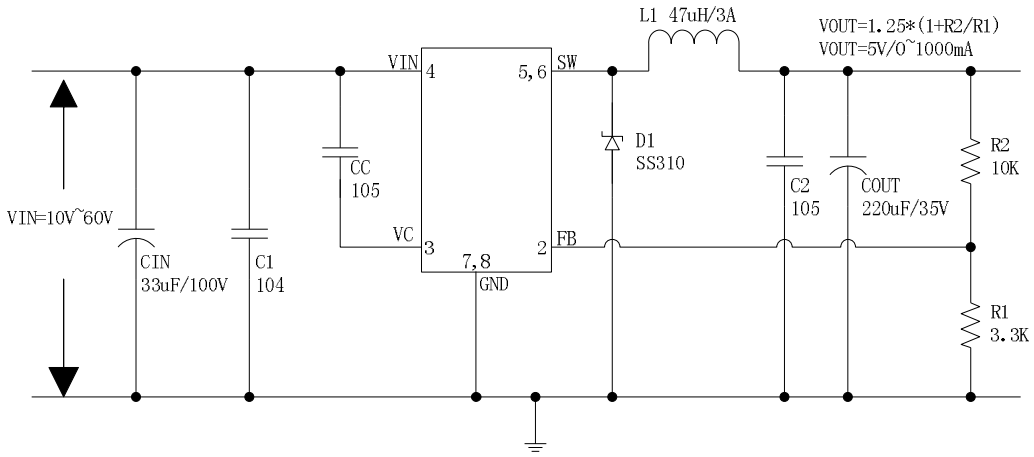

Figure7. HM3107 System Parameters Test Circuit (VIN=10V~60V, VOUT=5V/1A)

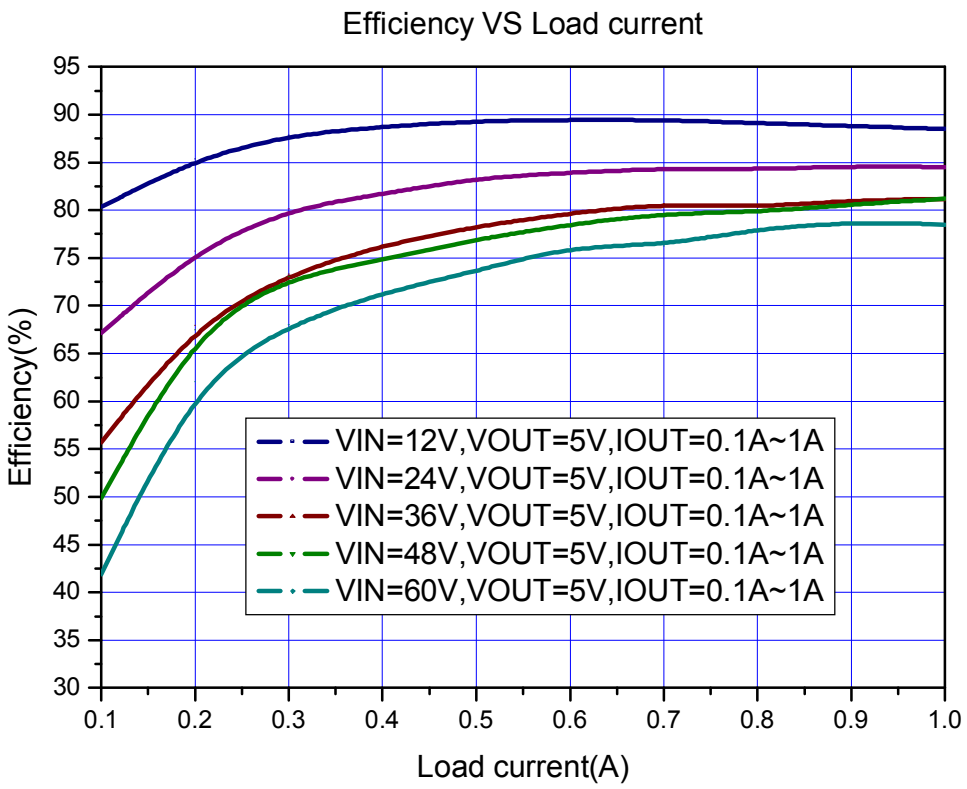

Figure8. HM3107 System Efficiency Curve

Typical System Application (VOUT=10V/1A)

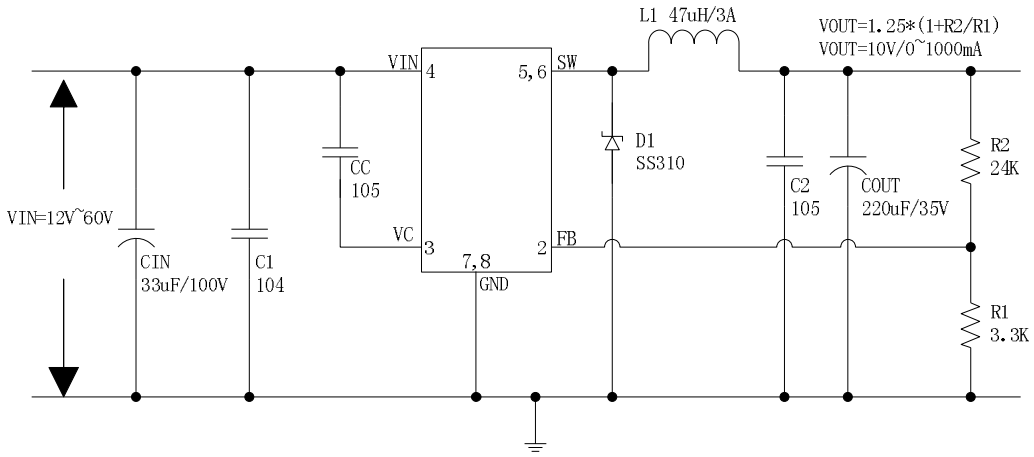

Figure9. HM3107 System Parameters Test Circuit (VIN=12V~60V, VOUT=10V/1A)

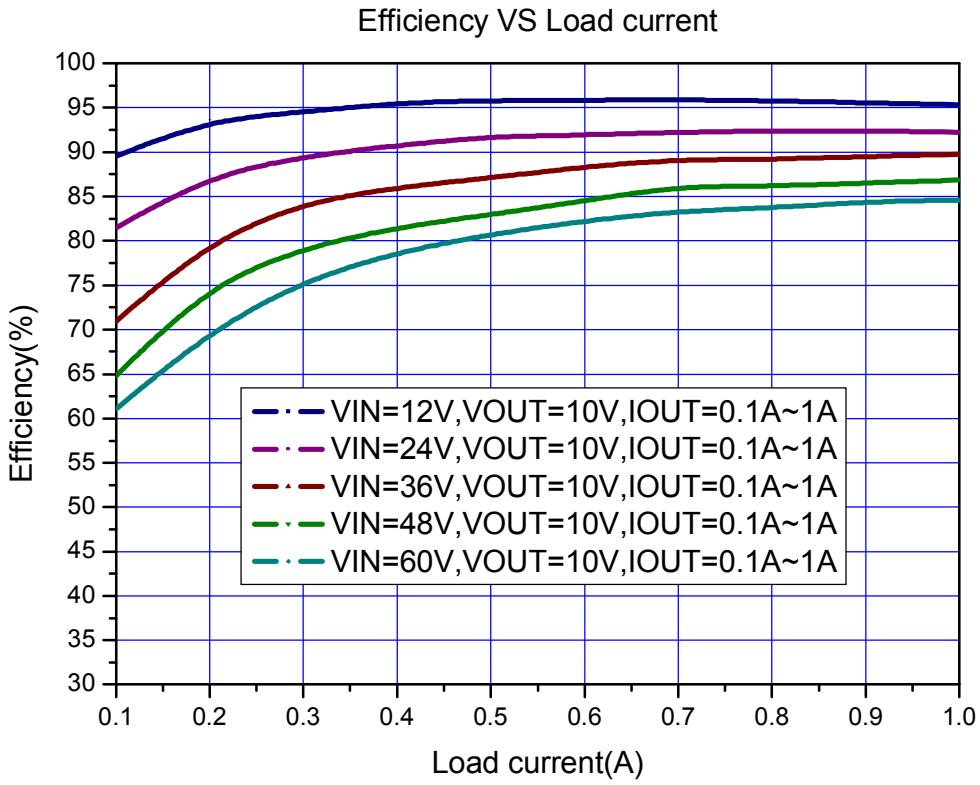

Figure10. HM3107 System Efficiency Curve

Typical System Application (VOUT=20V/0.5A)

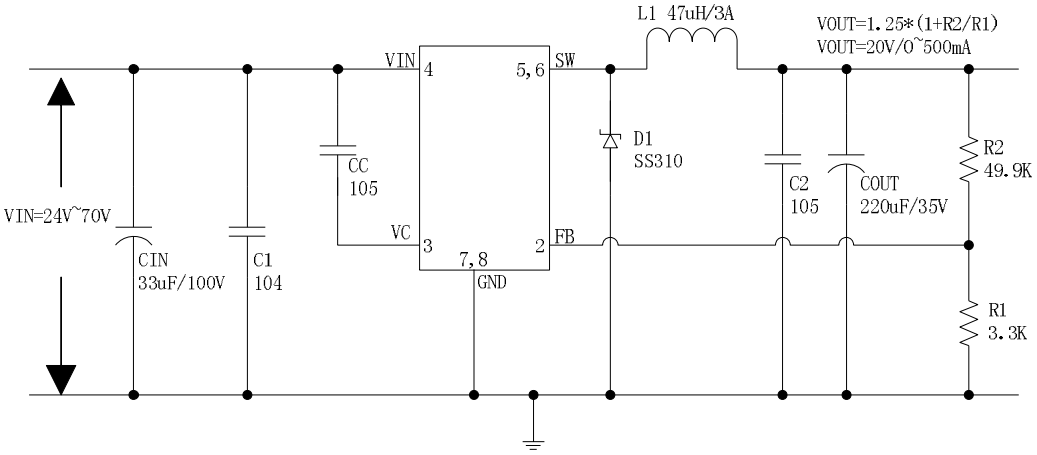

Figure11. HM3107 System Parameters Test Circuit (VIN=24V~70V, VOUT=20V/0.5A)

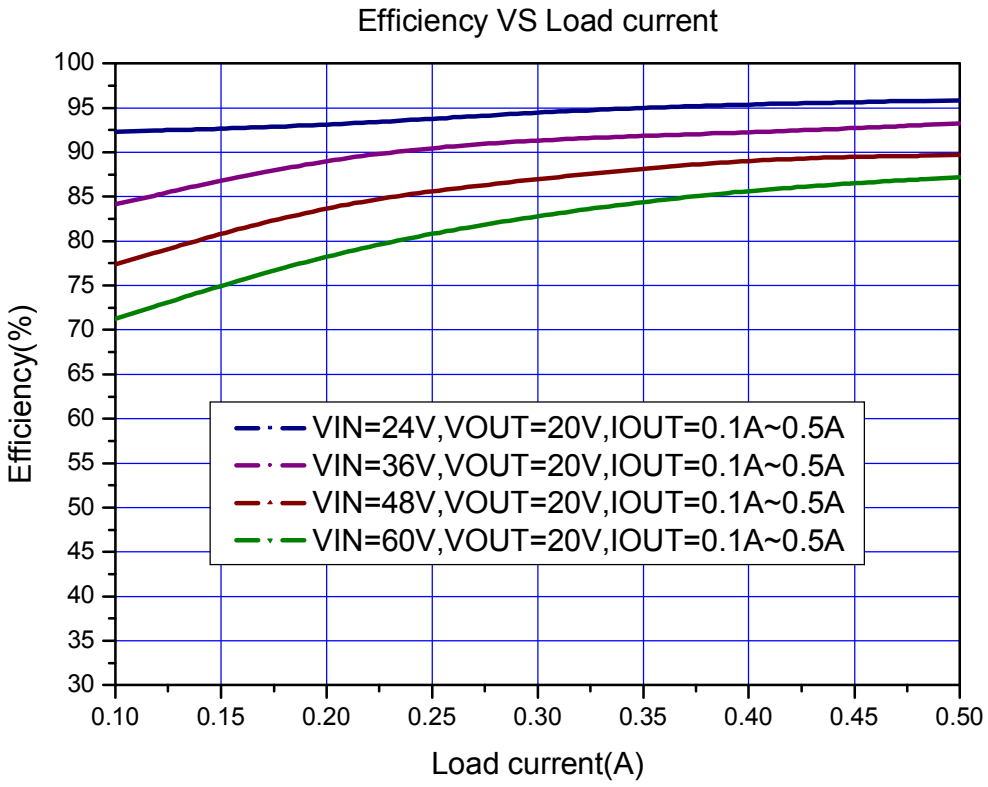

Figure12. HM3107 System Efficiency Curve

Package Information

SOP8 Package Mechanical Dimensions
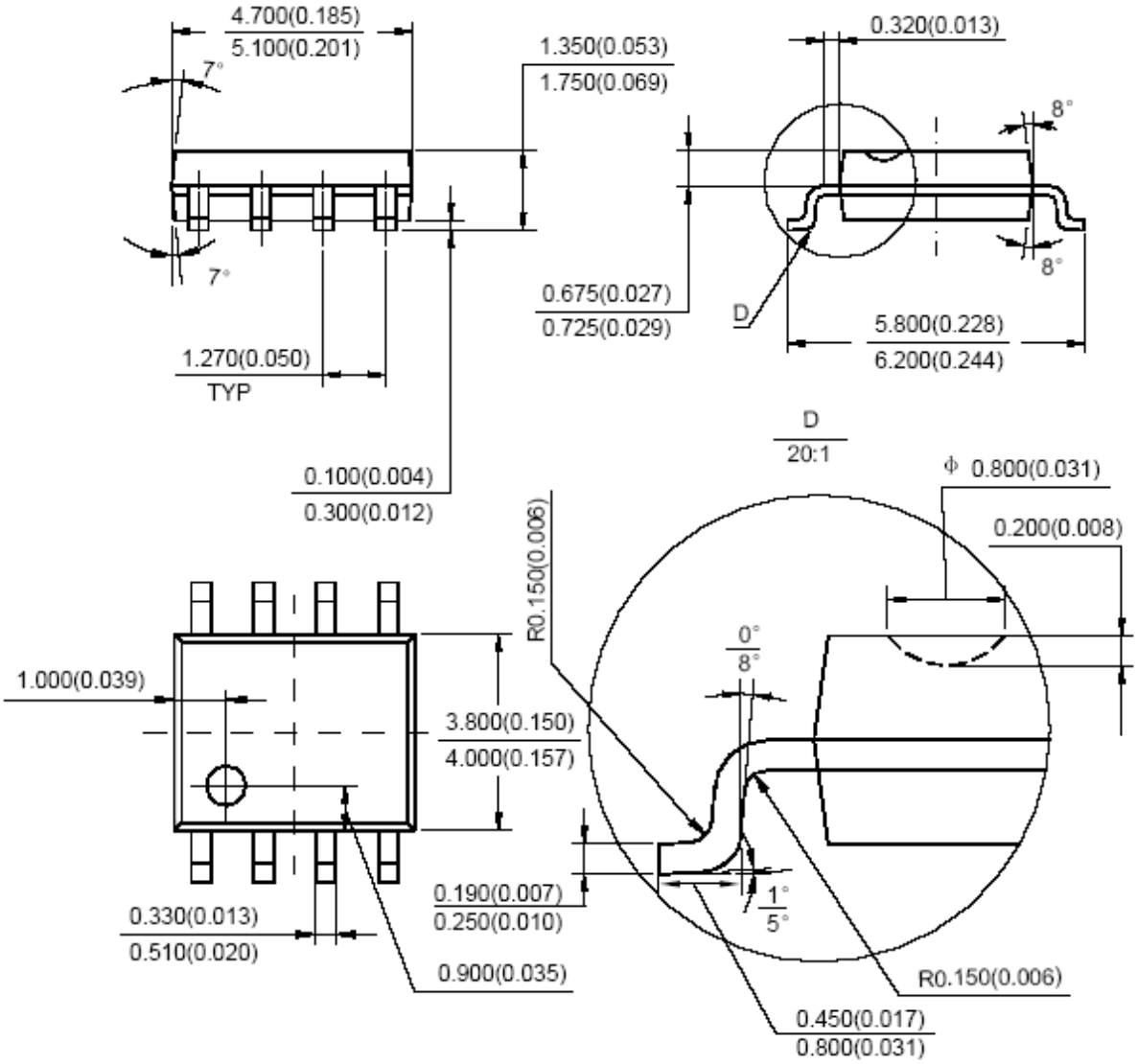
SOIC-8 Unit: mm(inch)