I amл series
Low Power Voltage Detector

Features

- Low power consumption
- Low temperature coefficient
- Built-in hysteresis characteristic
- High input voltage (up to 12V)
- Output voltage accuracy: tolerance ±1% or ±2%
- TO92, SOT89 and SOT23 package

Applications

- Battery checkers
- Level selectors
- Power failure detectors
- Microcomputer reset
- Battery memory backup
- Non-volatile RAM signal storage protectors

General Description

The HM70 series devices area set of three terminal low power voltage detectors implemented in CMOS technology. Each voltage detector in the series detects a particular fixed voltage ranging from 0.9V to 5.0V. The voltage detectors consist of a high-precision and low power consumption standard voltage source as well as a comparator, hysteresis circuit, and an output driver (CMOS inverter or NMOS open drain). CMOS technology ensures low power consumption.

Although designed primarily as fixed voltage detectors, these devices can be used with external components to detect user specified threshold voltages.

Selection Table

Part No.	Det. Voltage	Hys. Width	Output	Tolerance	Package
HM70C09XX	0.9V	4%	CMOS	±2%	TO92 SOT89 SOT23-3 SOT23-5
HM7009XX	0.9V	4%	NMOS	±2%	
HM70C10XX	1.0V	4%	CMOS	±2%	
HM7010XX	1.0V	4%	NMOS	±2%	
HM70C11XX	1.1V	4%	CMOS	±2%	
HM7011XX	1.1V	4%	NMOS	±2%	
HM70C12XX	1.2V	4%	CMOS	±2%	
HM7012XX	1.2V	4%	NMOS	±2%	
…	…	4%	…	±2%	
HM70C50XX	5.0V	4%	CMOS	±2%	
HM7050XX	5.0V	4%	NMOS	±2%	

Order Information

HM70①②③④⑤

DESIGNATOR	DESCRIPTION	DESIGNATOR	DESCRIPTION
①	Output Configuration: C=CMOS (space)=N-ch open drain	④	Package Type: M=SOT23-3 P=SOT89 N=SOT25 T=TO-92(Standard) L=TO-92(Custom pin configuration
②③	Detect Voltage 25=2.5V 38=3.8V	⑤	Device Orientation: R=Embossed Taped(Right) L=Embossed Taped(Left) H=Paper Type(TO-92) B=Bag(TO-92)

Block Diagram

(1) CMOS Output

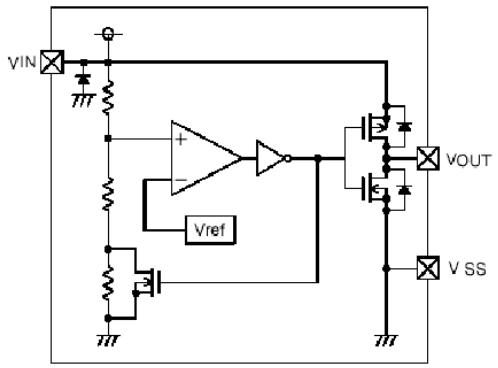

(2) N-ch Open Drain Output

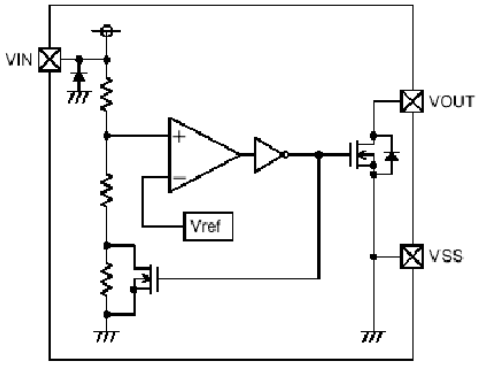

Output Table & Curve

V_{DD}	$V_{DD}>V_{DET}(+)$	$V_{DD}\leqslant V_{DET}(-)$
V_{OUT}	Hi-Z	V_{SS}

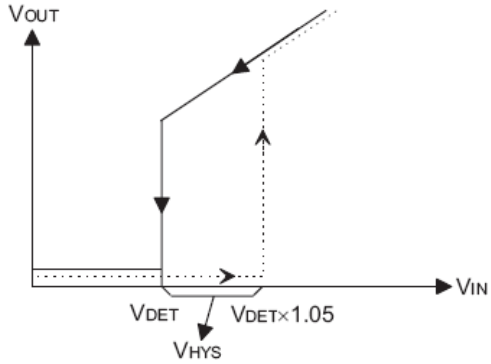

Dash line ... VIN from Lo → Hi
Solid line ... VIN from Hi → Lo

Pin Assignment

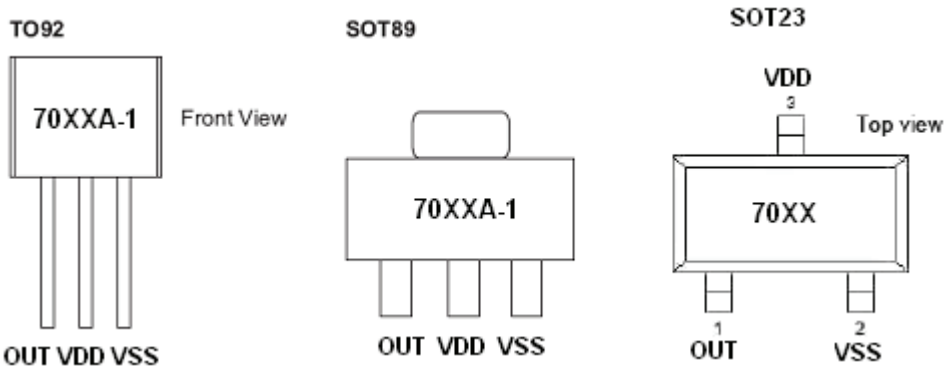

Absolute Maximum Ratings

Supply Voltage .....-0.3V to 12V Storage Temperature .....-50℃ to 125℃

Operating Temperature .....-40℃ to 85℃

Note: These are stress ratings only. Stresses exceeding the range specified under "Absolute Maximum Ratings" may cause substantial damage to the device. Functional operation of this device at other conditions beyond those listed in the specification is not implied and prolonged exposure to extreme conditions may affect device reliability.

Thermal Information

Symbol	Parameter	Package	Max.	Unit
θ_{JA}	Thermal Resistance (Junction to Ambient) (Assume no ambient airflow, no heat sink)	SOT23	500	℃/W
		SOT89	200	℃/W
		TO92	200	℃/W
P_D	Power Dissipation	SOT23	0.20	W
		SOT89	0.50	W
		TO92	0.50	W

Note: P_D is measured at Ta= 25℃

Electrical Characteristics

V_{DF}=0.8V~5.0V **Ta=25℃**

Symbol	Parameter	Test Conditions		Min.	Typ.	Max.	Unit
V_{DET}	Detection Voltage	V_{DF}=0.8V~2.2V V_{DF}=2.3V~5.0V		V_{DF}*0.98	V_{DF}	V_{DF}*1.02	V
V_{HYS}	Hysteresis Width	-		0.02 V_{DET}	0.04 V_{DET}	0.08 V_{DET}	V
I_{DD}	Operating Current	Vin=1.5V		-	0.7	2.3	μA
		Vin=2.0V		-	0.8	2.7	
		Vin=3.0V		-	0.9	3.0	
		Vin=4.0V		-	1.0	3.2	
		Vin=5.0V		-	1.1	3.6	
V_{DD}	Operating Voltage	-	-	0.7	-	10	V
I_{OL}	Output Sink Current	2V	V_{OUT}=0.2V	0.5	1	-	mA
$\frac{\Delta V_{DET}}{V_{DF}\Delta T_a}$	Temperature Coefficient	-	-25℃ <Ta<125℃	-	± 100	-	ppm/℃

Typical Performance Characteristics

(1) Output Voltage vs Input voltage

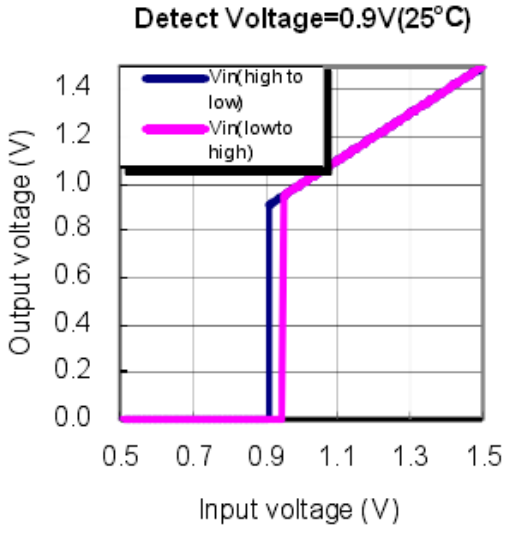

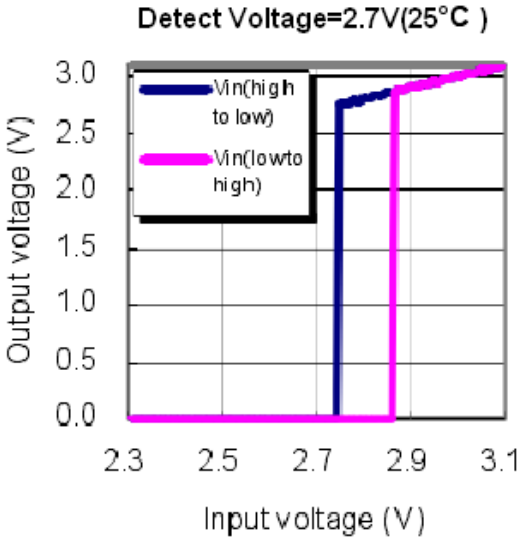

(2) Supply Current vs. Input Voltage

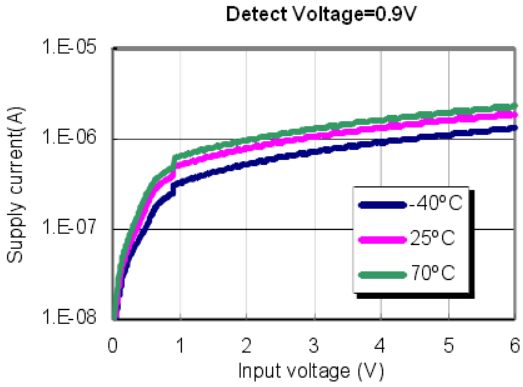

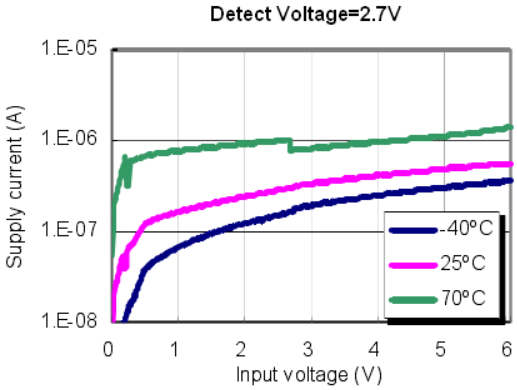

(3) Detect, Release Voltage vs. Ambient Temperature

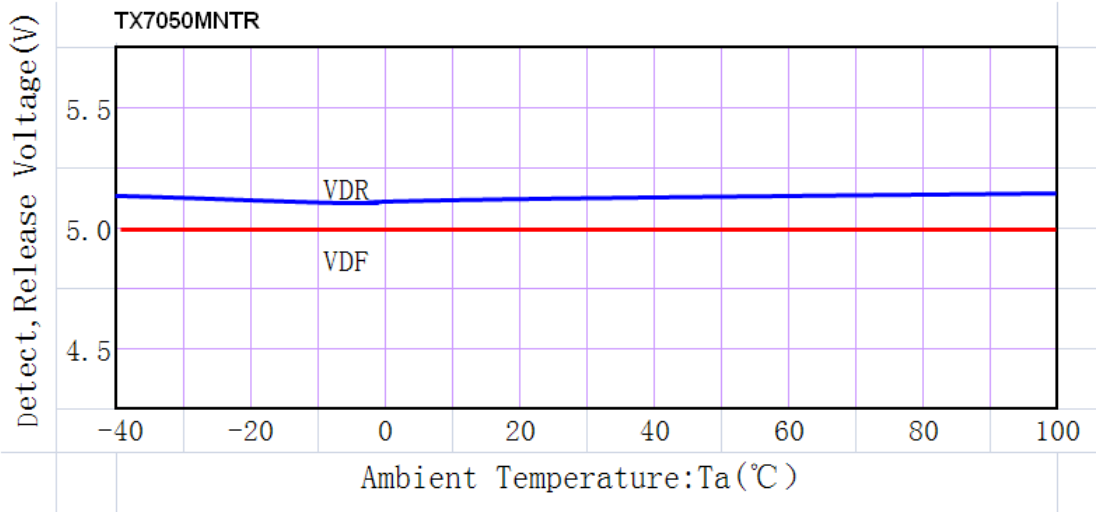

Application Circuits

Microcomputer Reset Circuit

Normally a reset circuit is required to protect the microcomputer system from malfunctions due to power line interrupttions. The following examples show how different output configuretions perform a reset function in various systems.

NMOS open drain output application for separate power supply

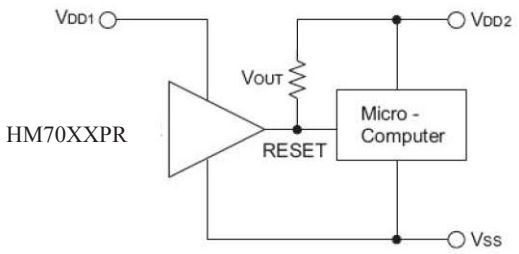

NMOS open drain output application with R-C delay

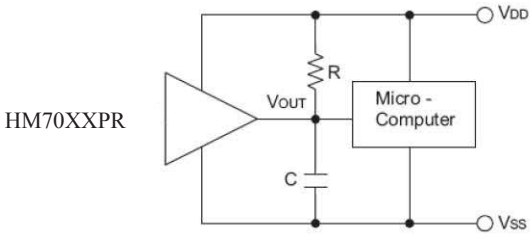

Power-on Reset Circuit

With several external components, the NMOS open drain type of the HM61 series can be used to perform a power-on reset function as shown:

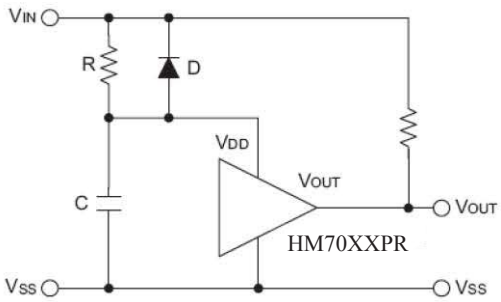

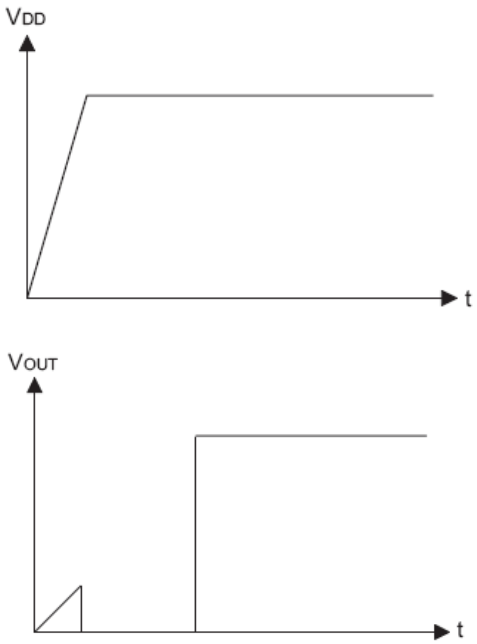

5V Power Line Monitoring Circuit

Generally, a minimum operating voltage of 4.5V is guaranteed in a 5V power line system. The HM61 is recommended for use as 5V power line monitoring circuit.

5V power line monitor with power-on reset

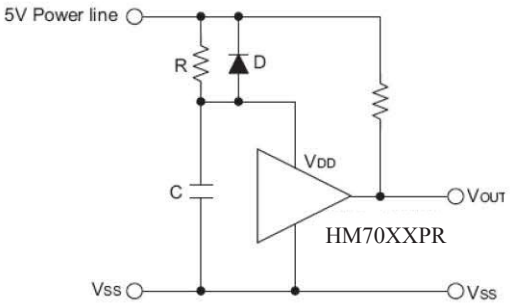

With 5V voltage regulator

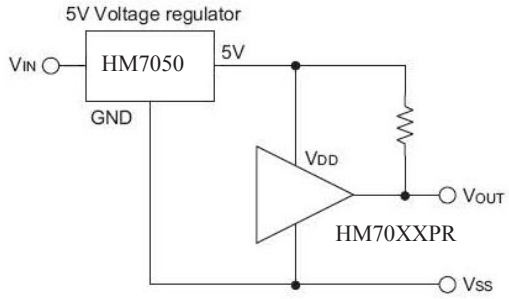

Change of Detectable Voltage

If the required voltage is not found in the standard product selection table, it is possible to change it by using external resistance dividers or diodes.

Varying the detectable voltage with a resistance divider

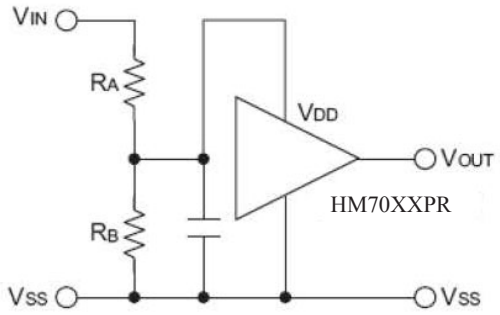

$$\text{Detectable voltage} = \frac{R_A + R_B}{R_B} \times V_{DET}$$

$$\text{Hysteresis width} = \frac{R_A + R_B}{R_B} \times V_{HYS}$$

Varying the detectable voltage with a diode

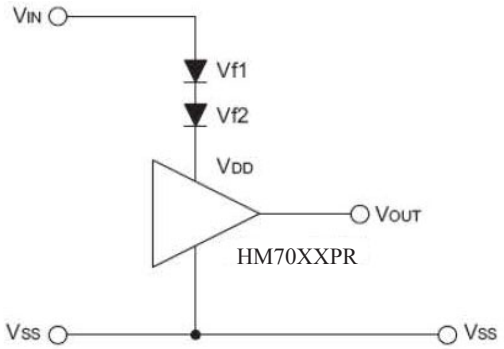

Level Selector

The following diagram illustrates a logic level selector.

$$\text{Detectable Voltage} = V_{f1} + V_{f2} + V_{DET}$$

Malfunction Analysis

The following circuit demonstrates the way a circuit analyzes malfunctions by monitoring the variation or spike noise of power supply voltage.

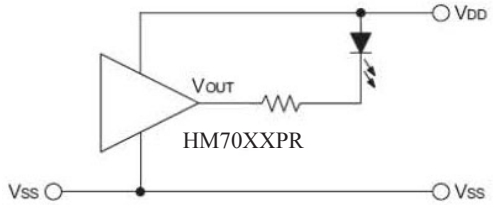

Charge Monitoring Circuit

The following circuit shows a charged monitor for protection against battery deterioration by overcharging. When the voltage of the battery is higher than the set detectable voltage, the transistor turns onto bypass the charge current, protecting the battery from overcharging.

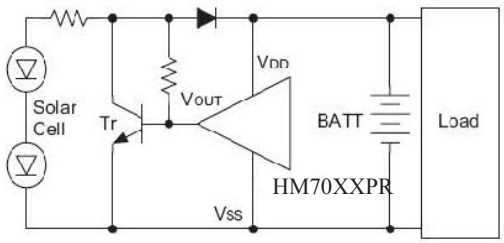

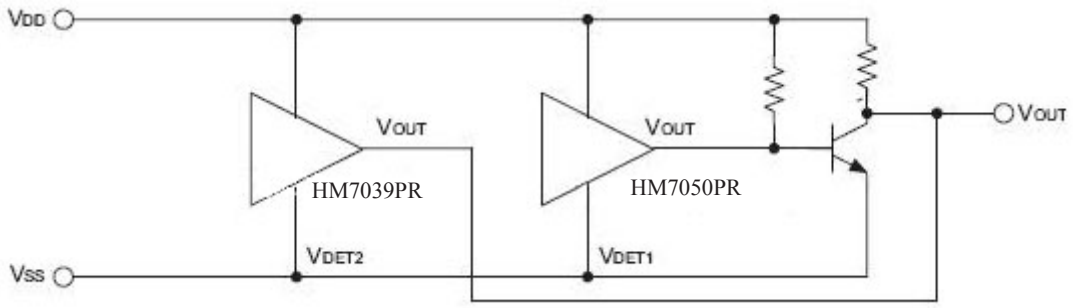
VDD
VOUT
HM7039PR
VDET2
VSS
VOUT
HM7050PR
VDET1
VOUT

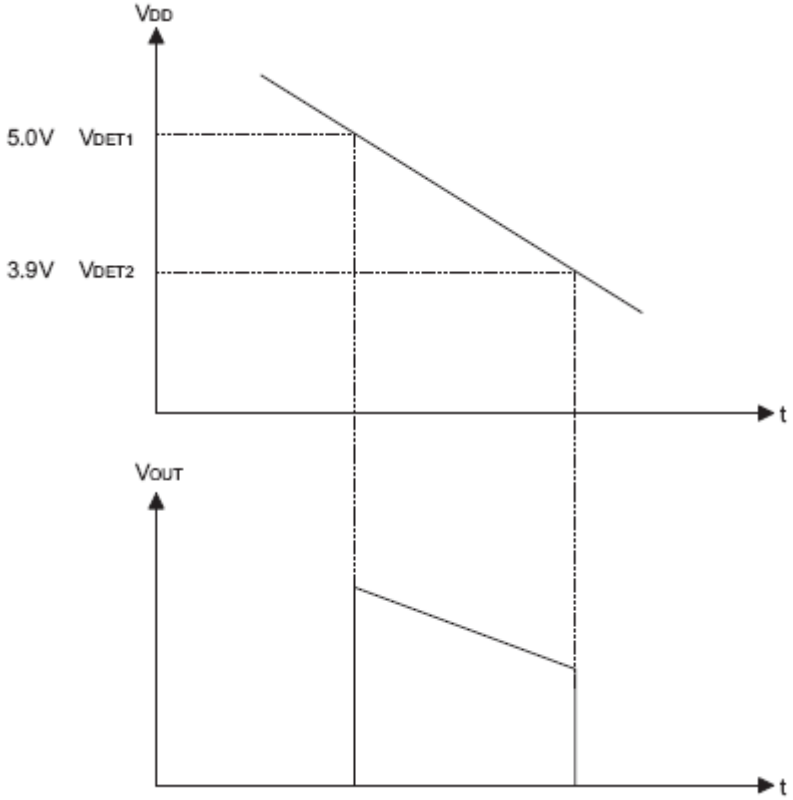
VDD
5.0V VDET1
3.9V VDET2
t
VOUT
t

Package Information

3-pin TO92 Outline Dimensions

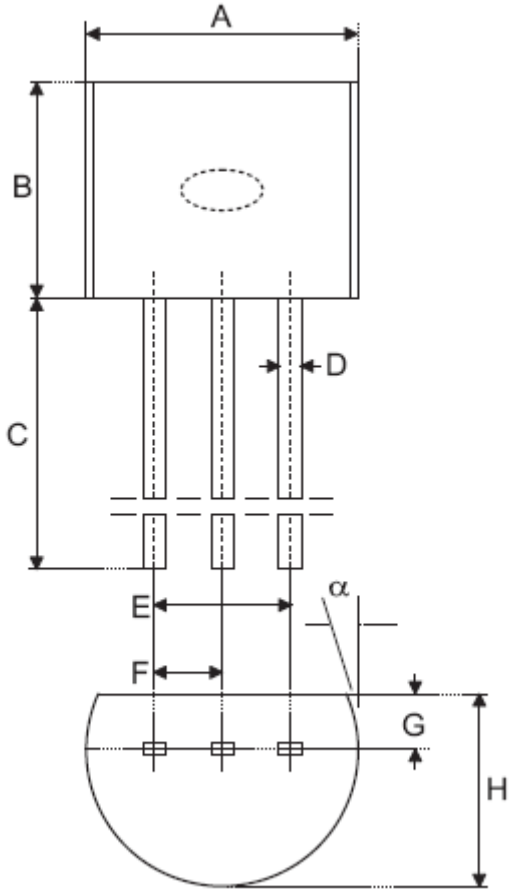

Symbol	Dimensions in mil		
	Min.	Nom.	Max.
A	170	—	200
B	170	—	200
C	500	—	—
D	11	—	20
E	90	—	110
F	45	—	55
G	45	—	65
H	130	—	160
I	8	—	18
α	4°	—	6°

3-pin SOT89 Outline Dimensions

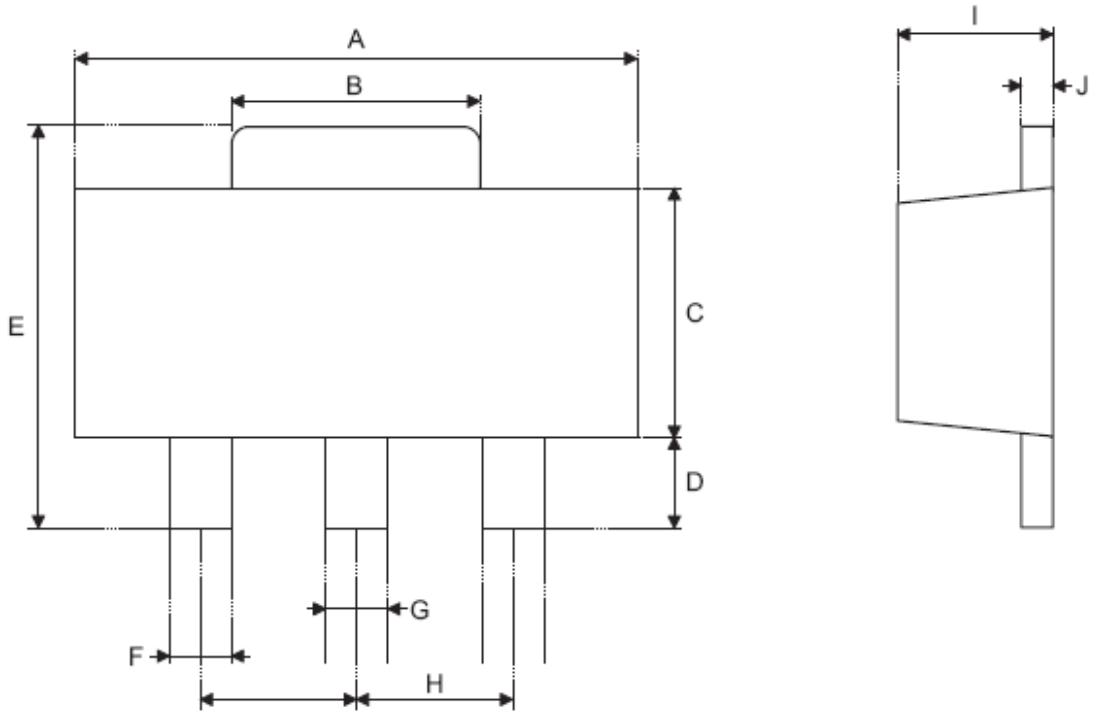

Symbol	Dimensions in mil		
	Min.	Nom.	Max.
A	173	—	181
B	59	—	72
C	90	—	102
D	35	—	47
E	155	—	167
F	14	—	19
G	17	—	22
H	—	59	—
I	55	—	63
J	14	—	17

3-pin SOT23-3 Outline Dimensions

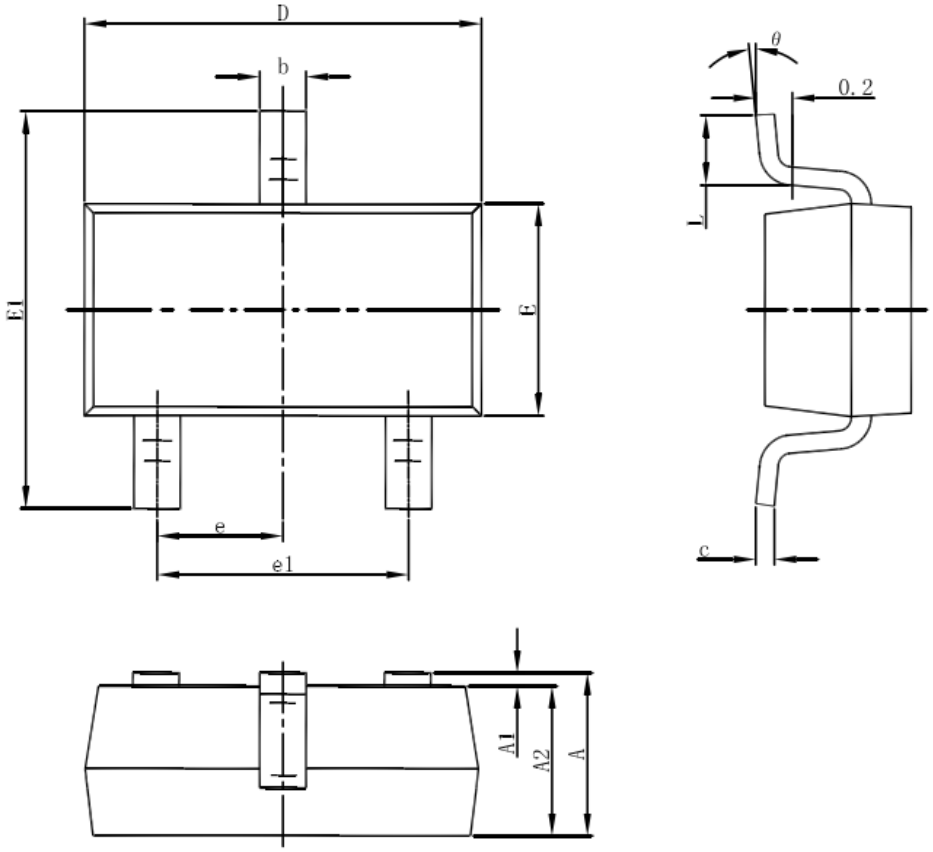

Symbol	Dimensions In Millimeters		Dimensions In Inches	
	Min	Max	Min	Max
A	1.050	1.250	0.041	0.049
A1	0.000	0.100	0.000	0.004
A2	1.050	1.150	0.041	0.045
b	0.300	0.500	0.012	0.020
c	0.100	0.200	0.004	0.008
D	2.820	3.020	0.111	0.119
E	1.500	1.700	0.059	0.067
E1	2.650	2.950	0.104	0.116
e	0.950(BSC)		0.037(BSC)	
e1	1.800	2.000	0.071	0.079
L	0.300	0.600	0.012	0.024
θ	0°	8°	0°	8°

5-pin SOT23-5 Outline Dimensions

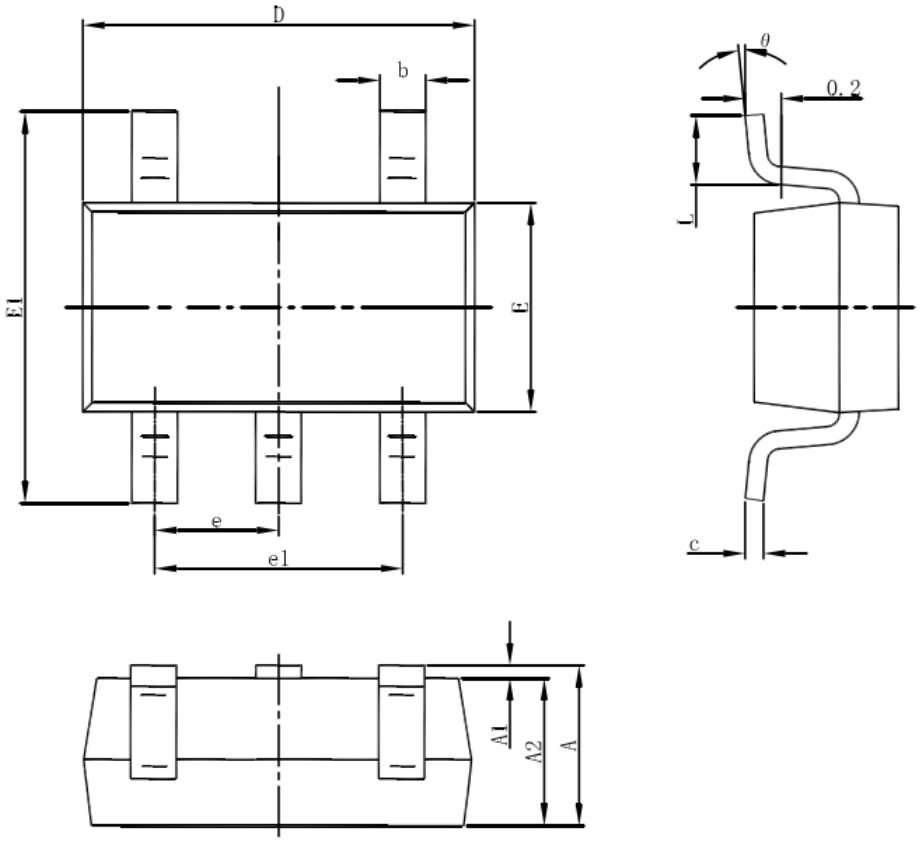

Symbol	Dimensions In Millimeters		Dimensions In Inches	
	Min	Max	Min	Max
A	1.050	1.250	0.041	0.049
A1	0.000	0.100	0.000	0.004
A2	1.050	1.150	0.041	0.045
b	0.300	0.500	0.012	0.020
c	0.100	0.200	0.004	0.008
D	2.820	3.020	0.111	0.119
E	1.500	1.700	0.059	0.067
E1	2.650	2.950	0.104	0.116
e	0.950(BSC)		0.037(BSC)	
e1	1.800	2.000	0.071	0.079
L	0.300	0.600	0.012	0.024
θ	0°	8°	0°	8°