High Efficiency, Synchronous Boost Converter with QC 2.0 Fast Charging Function

Description

The HM5277 is highly-integrated switch-mode system power management devices for smart power bank application and regulated output voltage including 5V /9V /12V. Its low impedance power switch optimizes switch-mode operation efficiency, reduces MOS power consumption. The USB D+/D- data line makes the device protocol handshake to set suitable output voltage to do fast charging function.
The chip is compliant with QC 2.0 class A specifications with Max. output current up to 3A at 5V. Besides the converter includes two switch MOSFETs as synchronous boost converter. So no external Schottky diode is required and could get better efficiency near 92%.

Other features include built-in soft start, thermal shutdown protection, under-voltage lockout (UVLO), and short circuit protection function, which can shut off the device if output voltage reaches below 1.5V.

The HM5277 is available in a space-saving SOP-8 (Exposed Pad) package with an exposed pad.

Features

- Input Voltage Range from 2.9V to 5.5V.
- Output Voltage Can be Set to 5V/9V/12V.
- Built-in Low R_{DS}(ON) Integrated Power MOSFET NMOS 39mΩ/PMOS 42mΩ
- 3.0A Output Current at 5V
- Fixed Switching Frequency 500KHz .
- ±2% Voltage Accuracy
- Power-Save Mode for Light-Load Efficiency.
- Short Circuit Current Fold-back Protection.
- Built-in Soft Start, Output Overvoltage Protection and Thermal Protection
- Supports USB DCP Shorting D+ Line to D- Line per USB Battery Charging Specification, Revision 1.2.
- Meets Chinese Telecommunication Industrial Standard YD/T 1591-2009
- Supports USB DCP applying 2.7V on D+ line and 2.7V on D- line.
- Supports USB DCP applying 1.2V on D+ and D- lines
- Automatic selection of D+/D- mode for an attached device
- Complaint with Apple® and Samsung devices
- SOP-8 (Exposed Pad) Pb-Free Package

Applications

- Backup Battery Pack
- Mobile / Tablet Power
- Digital Cameras and Bluetooth Accessories
- USB Power Output Ports

Pin Assignments

SP Package (SOP-8 Exposed Pad)

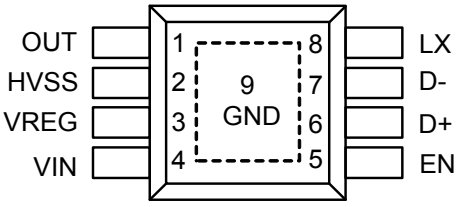

Figure 1. Pin Assignment of HM5277

Ordering Information

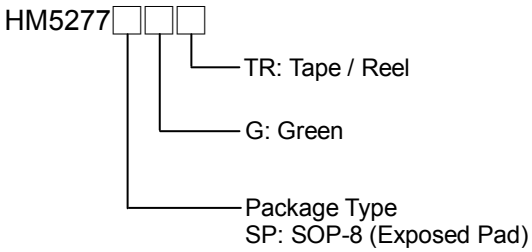

Typical Application Circuit

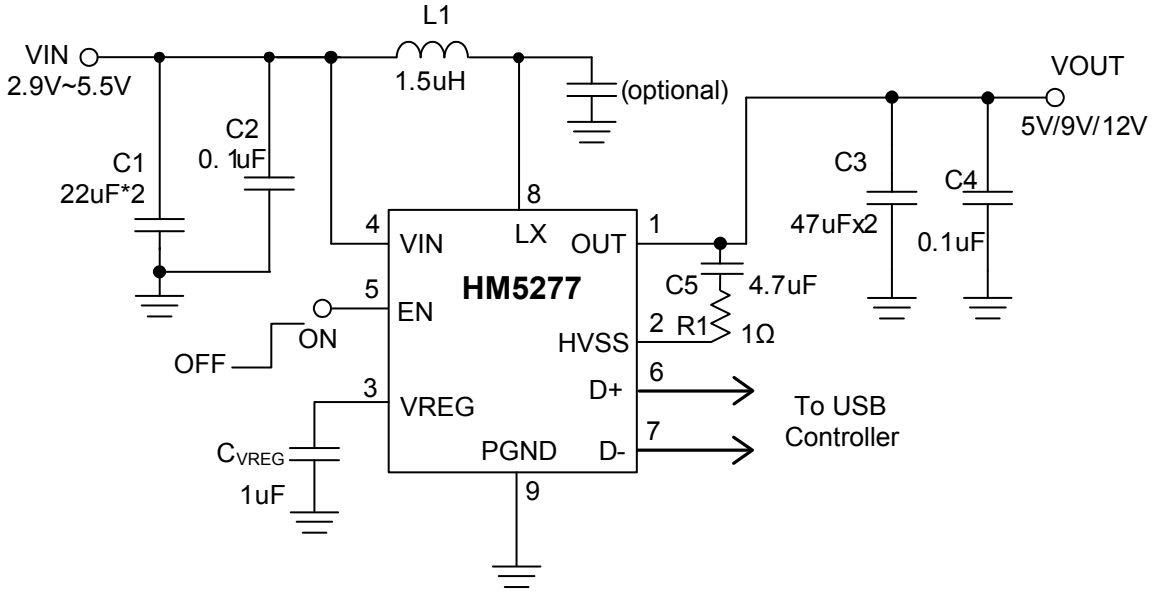

Figure 2. Typical Application Schematic

Functional Pin Description

Pin Name	Pin No.	Pin Function
OUT	1	Output of the Synchronous Rectifier.
HVSS	2	PMOS Gate Drive Pin. A capacitance 4.7uF must be connected from this pin to OUT. It can gate drive to fully turn on the internal PMOS.
VREG	3	Regulation Voltage Pin. It must be bypassed with at least a 1μF capacitor to GND
VIN	4	Power Supply Input Pin.
EN	5	Logic Controlled Shutdown Input.
D+	6	USB D+ data line input
D-	7	USB D- data line input
LX	8	Power Switching Connection. Connect LX to the inductor and output rectifier.
GND	9	The thermal pad must be connected to the same potential as the GND pin on the printed circuit board.

Block Diagram

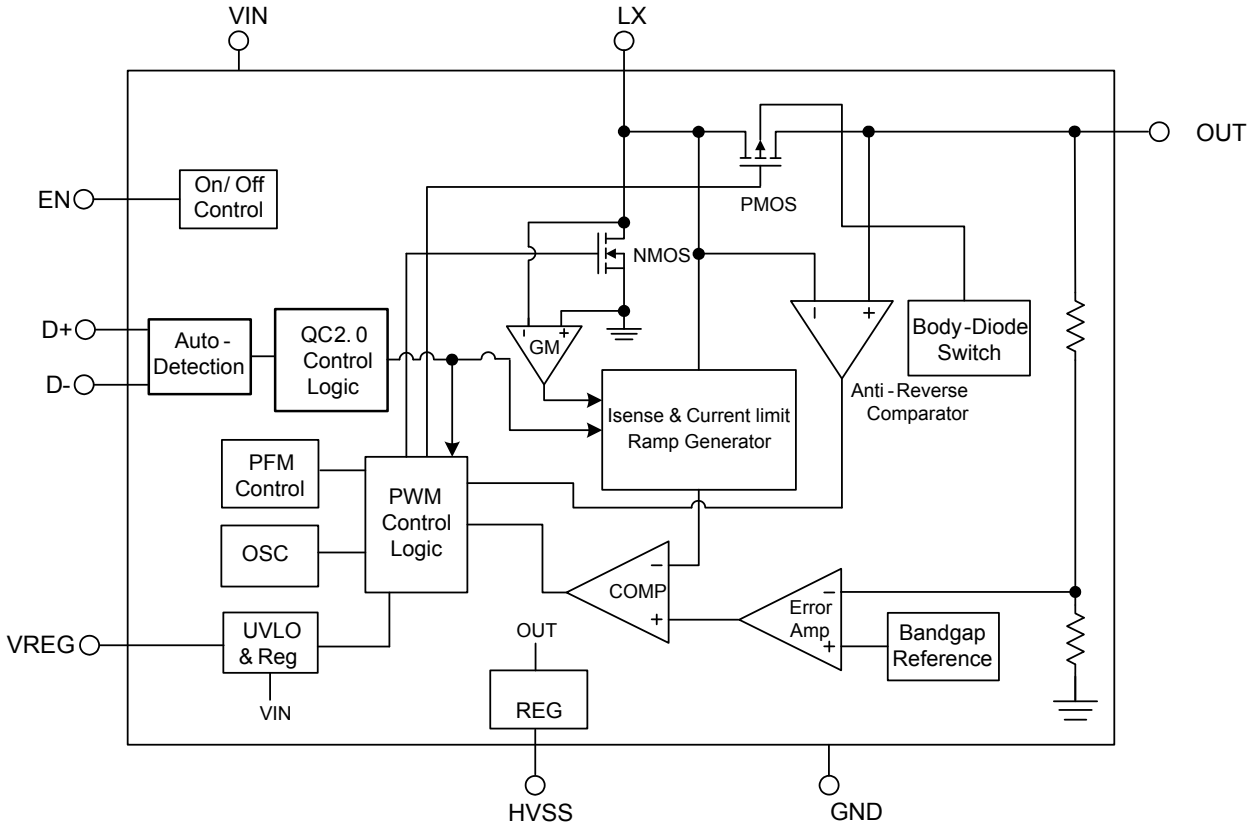

Figure 3. Block Diagram of HM5277

Absolute Maximum Ratings

- Input Supply Voltage VIN ---------- - 0.3V to + 6V
- Output Voltage V_{OUT}---------- - 0.3V to + 15V
- All Other Pins Voltage ---------- - 0.3V to + 6V
- LX to GND ---------- -0.3V to +18V
- Maximum Junction Temperature (T_J)---------- + 150℃
- Storage Temperature (T_S)---------- - 65℃ to + 150℃
- Lead Temperature (Soldering, 10sec.) ---------- +260°C
- Power Dissipation @T_A=25℃, (P_D)
  SOP-8 (Exposed Pad)---------- 2.08W
- Package Thermal Resistance, (θ_{JA}):
  SOP-8 (Exposed Pad)---------- 60°C/W
- Package Thermal Resistance, (θ_{JC}):
  SOP-8 (Exposed Pad)---------- 15°C/W

Note1：Stresses beyond those listed under “Absolute Maximum Ratings" may cause permanent damage to the device.

Recommended Operating Conditions

- Input Supply Voltage (VIN)---------- 2.9V ~ 5.5V
- OUT Operating Voltage (V_{OUT_OPAT})---------- 5V ~ 12V
- Operation Temperature Range (T_{OPR}) ---------- -40°C to +85°C

Note：Over operating free-air temperature range (unless otherwise noted)

Electrical Characteristics

(T_A=25℃ and the recommended supply voltage range, unless otherwise specified.)

Parameter	Symbol	Conditions	Min	Typ	Max	Unit
Input Power						
VIN Input Voltage Range	V_{IN}		2.9		5.5	V
Input UVLO Threshold	$V_{UVLO(VTH)}$	V_{IN} Rising	2.5	2.7		V
Under Voltage Lockout Threshold Hysteresis	$V_{UVLO(HYS)}$	V_{IN} Falling		250		mV
VIN Supply Current (Switching)		VIN=3.3V, Measure V_{IN}		TBD		μA
VIN Supply Current (No witching)				TBD		μA
Reference Voltage	V_{REG}			5		V
High-Side PMOSFET R_{DS}(ON)				42		mΩ
Low-Side NMOSFET R_{DS}(ON)				39		mΩ
High-Side MOSFET Leakage Current	$I_{LX(leak)}$	V_{LX}=12V, V_{OUT}=0V			10	μA
Low-Side MOSFET Leakage Current		V_{LX}=12V			10	μA
Oscillation Frequency	F_{OSC}		400	500	600	KHz
OUT Short-circuit Detection Threshold	$OUT_{(SC)}$	OUT voltage Falling		1.5		V
OUT Output Overvoltage Protection Threshold	V_{OUT_OVP}	VOUT Rising		13.5		V
OUT OVP Hysteresis on Input Voltage	$V_{OUT\_HYS\_OVP}$	VOUT Falling		300		mV
OUT Short Circuit Fold-back Current Limit		V_{IN}= 3.3V		100		mA
Low-side MOS Switch Current Limit		V_{IN}= 3.3V		8		A
Line Regulation		V_{IN}=3.2V to OUT, I_{OUT}=1A			1	%
Load Regulation		I_{OUT}=0.1A to 3A, OUT=5V		5		%
Maximum Duty Cycle	D_{MAX}	V_{IN}=3.3V	85	90	95	%
Soft Start Time	T_{SS}			1	3	mS
Others						
EN High-Level Input Voltage	V_{IH}		1.5			V
EN Low-Level Input Voltage	V_{IL}				0.4	V
EN Pull Down Resistor	R_{EN}			1		MΩ
Thermal Shutdown Temperature (Note 3)	T_{SD}			160		℃
Thermal Shutdown Temperature Hysteresis				30		℃
USD Data Line Specifications (D+, D-)						

Data Detect Voltage	$V_{DAT(REF)}$		0.25	0.325	0.4	V
Output voltage selection reference	V_{SEL_REF}		1.8	2.0	2.2	V
Data Lines Short-Circuit Delay	$T_{DAT(SHORT)}$	VOUT ≥ 0.8 V		10	20	ms
D+ High Glitch Filter Time	$T_{GLITCH(BC)-D+H}$		1000	1250	1500	ms
D- Low Glitch Filter Time	$T_{GLITCH(BC)-D-L}$		1			ms
Output Voltage Glitch Filter Time	$T_{GLITCH(V)CHANGE}$		20	40	60	ms
D- Pull-Down Resistance	$R_{D-(DWN)}$			20		KΩ
D+ to D- resistance during DCP mode	R_{DCP_DAT}			40		Ω

Note ：Not production tested.

Outline Information

SOP-8 (Exposed Pad) Package (Unit: mm)

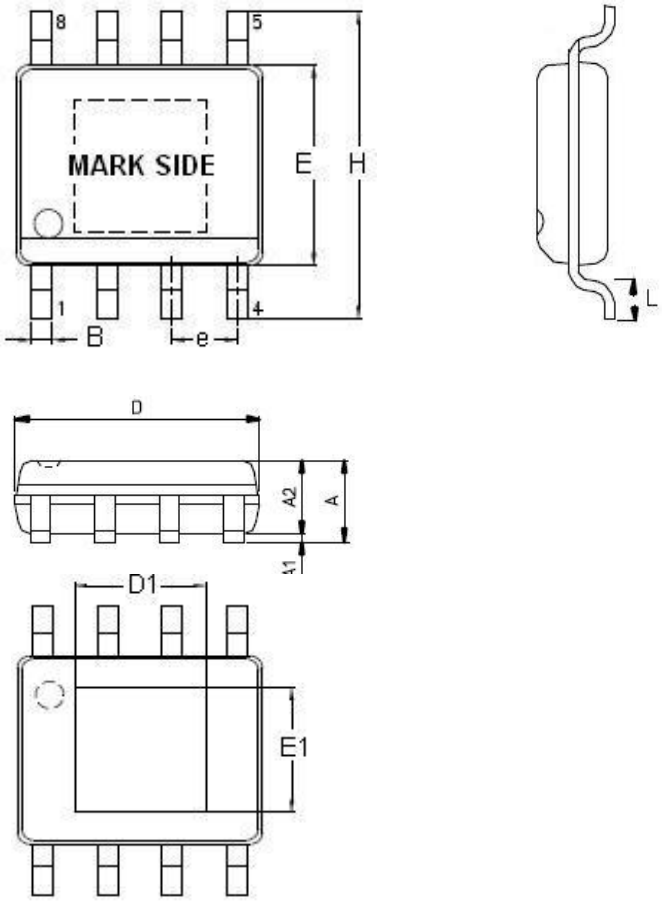

SYMBOLS UNIT	DIMENSION IN MILLIMETER	
	MIN	MAX
A	1.25	1.70
A1	0.00	0.15
A2	1.25	1.55
B	0.31	0.51
D	4.80	5.00
D1	3.04	3.50
E	3.80	4.00
E1	2.15	2.41
e	1.20	1.34
H	5.80	6.20
L	0.40	1.27

Note：Followed From JEDEC MO-012-E.

Carrier Dimensions

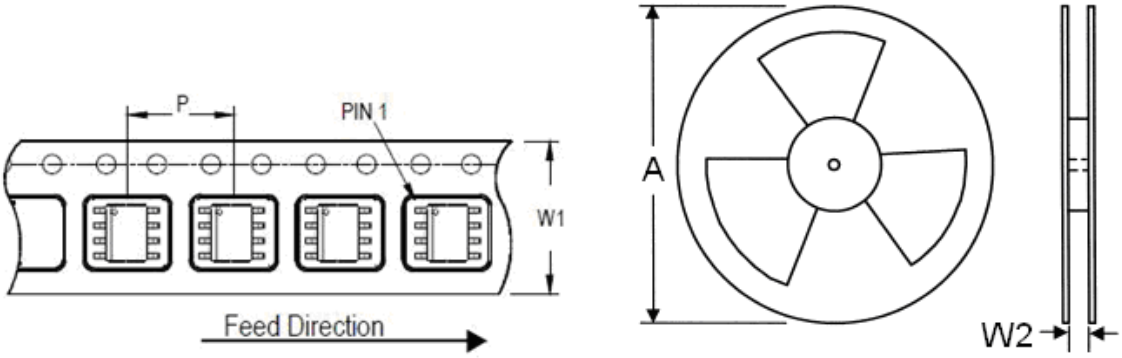

Tape Size (W1) mm	Pocket Pitch (P) mm	Reel Size (A)		Reel Width (W2) mm	Empty Cavity Length mm	Units per Reel
		in	mm			
12	8	13	330	12.4	400~1000	2,500

Life Support Policy

Fitipower's products are not authorized for use as critical components in life support devices or other medical systems.