3A STEP-DOWN VOLTAGE SWITCHING REGULATOR

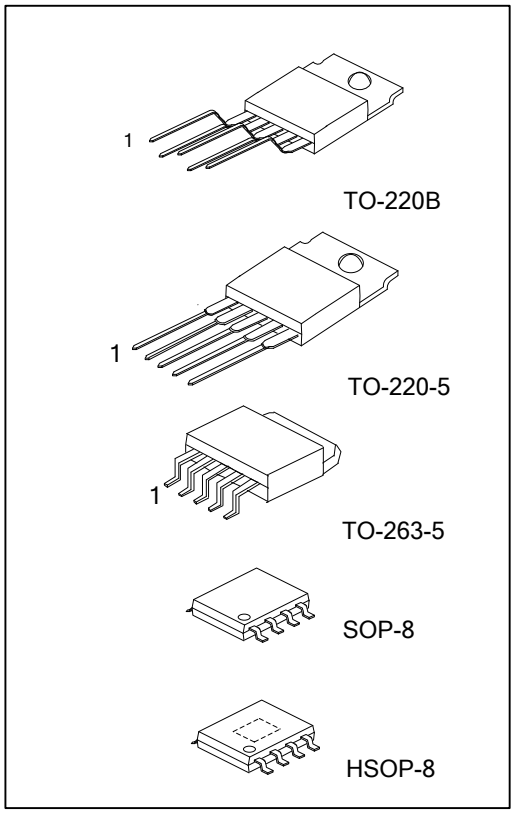

■ DESCRIPTION

As a step-down (buck) switching regulator, the UTC **P2576** provides drives 3A load. The UTC **P2576** are simple because it only needs to use a minimum number of external components.

Frequency compensation and a fixes-frequency oscillator are in it. UTC **P2576** can perform with standard inductors, and simplifying the switch mode power supplies' design. UTC **P2576** guarantees output load conditions and ±10% on the oscillator frequency. Its external shutdown is included with 50μA standby current. As well as thermal shutdown for full protection under fault conditions, the output switch has cycle by cycle current limiting.

■ FEATURES

* Output Current 3A
* Input Voltage Range from 7V to 40V
* Requires 4 External Components
* Very High Efficiency
* TTL Shutdown
* Low Power Standby Mode
* Thermal Shutdown,
* Current Limit Protection
* Internal Oscillator: 52 kHz Fixed Frequency

■ ORDERING INFORMATION

Ordering Number		Package	Packing
Lead Free	Halogen Free		
P2576L-xx-TA5-T	P2576G-xx-TA5-T	TO-220-5	Tube
P2576L-xx-TB5-T	P2576G-xx-TB5-T	TO-220B	Tube
P2576L-xx-TQ5-R	P2576G-xx-TQ5-R	TO-263-5	Tape Reel
P2576L-xx-TQ5-T	P2576G-xx-TQ5-T	TO-263-5	Tube
-	P2576G-xx-S08-R	SOP-8	Tape Reel
-	P2576G-xx-SH2-R	HSOP-8	Tape Reel

Note: xx: Output Voltage, refer to Marking Information.

P2576L-xx-TA5-T

(1)Packing Type

(2)Package Type

(3)Output Voltage Code

(4)Green Package

(1) T: Tube, R: Tape Reel

(2) TA5: TO-220-5, TB5: TO-220B, TQ5: TO-263-5, S08: SOP- 8, SH2: HSOP-8

(3) xx: refer to Marking Information

(4) L: Lead Free, G: Halogen Free and Lead Free

Copyright © 2015 Unisonic Technologies Co., Ltd

■ MARKING INFORMATION

PACKAGE	VOLTAGE CODE	MARKING
TO-220B TO-220-5 TO-263-5	50:5.0V AD:ADJ	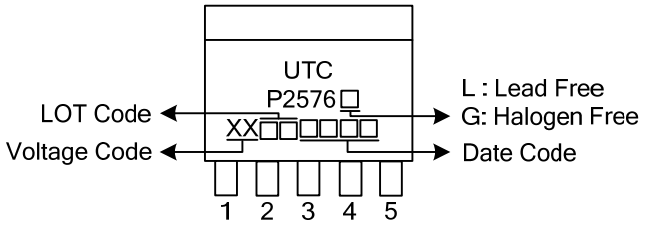
SOP-8 HSOP-8		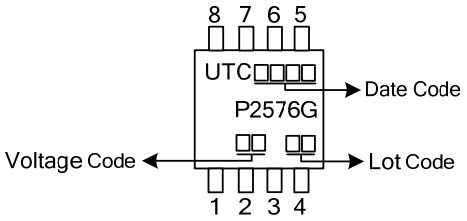

■ PIN CONFIGURATION of SOP-8/HSOP-8

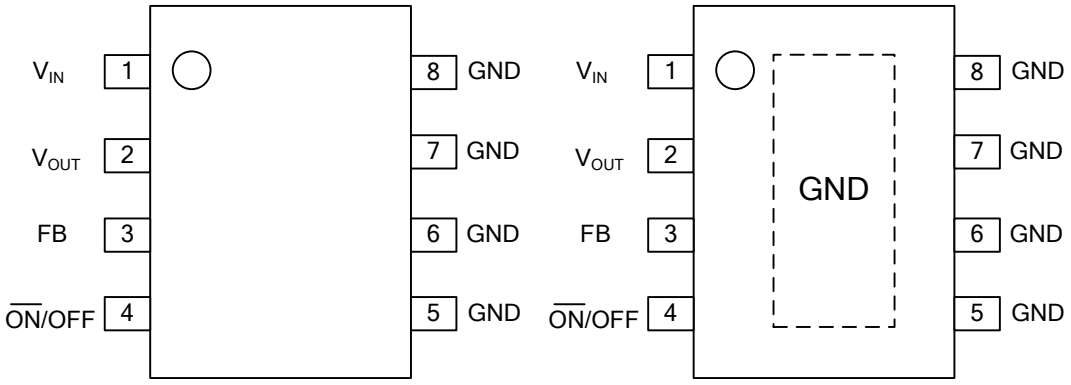

SOP-8 HSOP-8

■ PIN DESCRIPTIONS

FOR SOP-8/HSOP-8

PIN NO.	PIN NAME	PIN DESCRIPTION
1	V_{IN}	Input voltage
2	V_{OUT}	Output voltage
3	FB	Feed back.
4	$\overline{ON}$/OFF	$\overline{ON}$/OFF select pin, when connected to the ground the chip in operating normally.
5,6,7,8	GND	Ground

FOR TO-220B/TO-220-5/TO-263-5

PIN NO.	PIN NAME	PIN DESCRIPTION
1	V_{IN}	Input voltage
2	V_{OUT}	Output voltage
3	GND	Ground
4	FB	Feed back.
5	$\overline{ON}$/OFF	$\overline{ON}$/OFF select pin, when connected to the ground the chip in operating normally.

■ BLOCK DIAGRAM

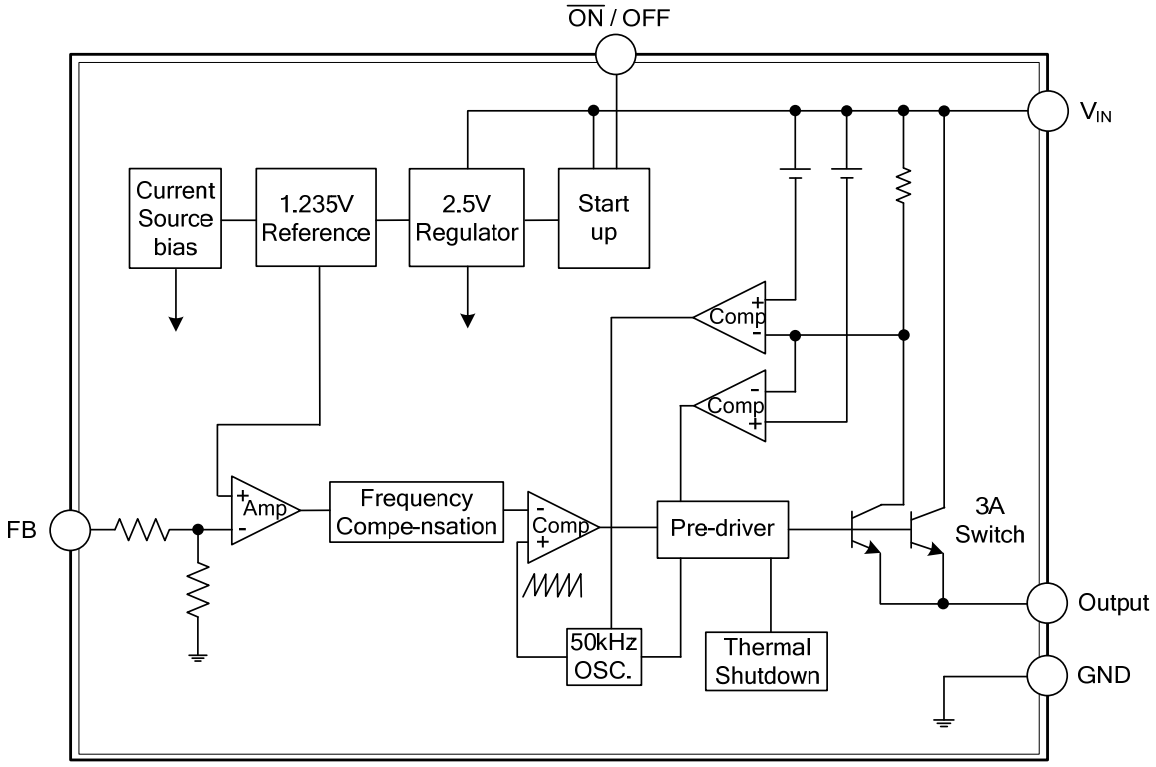

■ ABSOLUTE MAXIMUM RATINGS (T_A=25°C, unless otherwise specified)

PARAMETER	SYMBOL	RATINGS	UNITS
Supply Voltage	V_{CC}	40	V
Maximum Supply Voltage	$V_{CC(MAX)}$	45	V
$\overline{ON}$/OFF Pin Input Voltage	$V_{ON/OFF}$	-0.3 ~ V_{IN}	V
Output Voltage to Ground (Steady State)	V_{OUT}	-1.0	V
Power Dissipation	P_D	Internally Limited	mW
Junction Temperature	T_J	+150	°C
Operating Temperature	T_{OPR}	-40 ~ +125	°C
Storage Temperature	T_{STG}	-65 ~ +150	°C

Note: Absolute maximum ratings are those values beyond which the device could be permanently damaged. Absolute maximum ratings are stress ratings only and functional device operation is not implied.

■ ELECTRICAL CHARACTERISTICS (T_J=25°C, V_{IN}=12V, I_{LOAD}=500mA.)

PARAMETER	SYMBOL	TEST CONDITIONS	MIN	TYP	MAX	UNIT
P2576 - 5.0V						
Feedback Voltage	V_{OUT}	V_{IN}=12V, I_{LOAD}=0.5A	4.900	5.0	5.100	V
		8V≤V_{IN}≤40V, 0.5A≤I_{LOAD}≤3.0A	4.800	5.0	5.200	V
Efficiency	η	V_{IN} = 12 V, I_{LOAD} =3.0 A		77		%
P2576 - ADJ						
Feedback Voltage	V_{FB}	V_{IN}=12V, I_{LOAD}=0.5A, V_{OUT} =5V	1.217	1.23	1.243	V
		8V≤V_{IN}≤40V, 0.5A≤I_{LOAD}≤3.0A, V_{OUT} =5V	1.193	1.23	1.267	V
Efficiency	η	V_{IN} = 12 V, I_{LOAD} =3.0 A, V_{OUT} =5V		77		%
ALL OUTPUT VOLTAGE						
Oscillator Frequency	f_{OSC}	(Note 4)	42	52	63	kHz
Saturation Voltage	V_{SAT}	I_{OUT}=3A (Note 1)		1.4	1.8	V
Max Duty Cycle (ON)	DC	(Note 2)	93	98		%
Current Limit	I_{LIMIT}	(Note 1, 4)	4.2	5.8	6.9	A
Output Leakage Current	$I_{I(LEAK)}$	V_{IN}=40V, Output=-1V (Notes 3)			2	mA
		Output=-1V		7.5	30	mA
Quiescent Current	IQ	(Note 3)		5	10	mA
Standby Quiescent Current	I_{STBY}	$\overline{ON}$/OFF Pin=5V (OFF)		50	200	μA
ON/OFF Pin Logic Input Level	V_{IH}	V_{OUT}=0V	2.2			V
	V_{IL}	V_{OUT}=Nominal Output Voltage			1.0	V
ON/OFF Pin Input Current	I_{IH}	$\overline{ON}$/OFF Pin=5V (OFF)		12	30	μA
	I_{IL}	$\overline{ON}$/OFF Pin=5V (ON)		0	10	μA

Notes: 1. Output pin sourcing current. No diode, inductor or capacitor connected to output.
2. Feedback pin removed from output and connected to 0V.
3. Feedback pin removed from output and connected to +12V, to force the output transistor OFF.
4. The oscillator frequency reduces to approximately 11 kHz in the event of an output short or an overload which causes the regulated output voltage to drop approximately 40% from the nominal output voltage. This self- protection feature lowers the Average power dissipation of P2576 by lowering the minimum duty cycle from 5% down to approximately 2%.

■ APPLICATION CIRCUIT

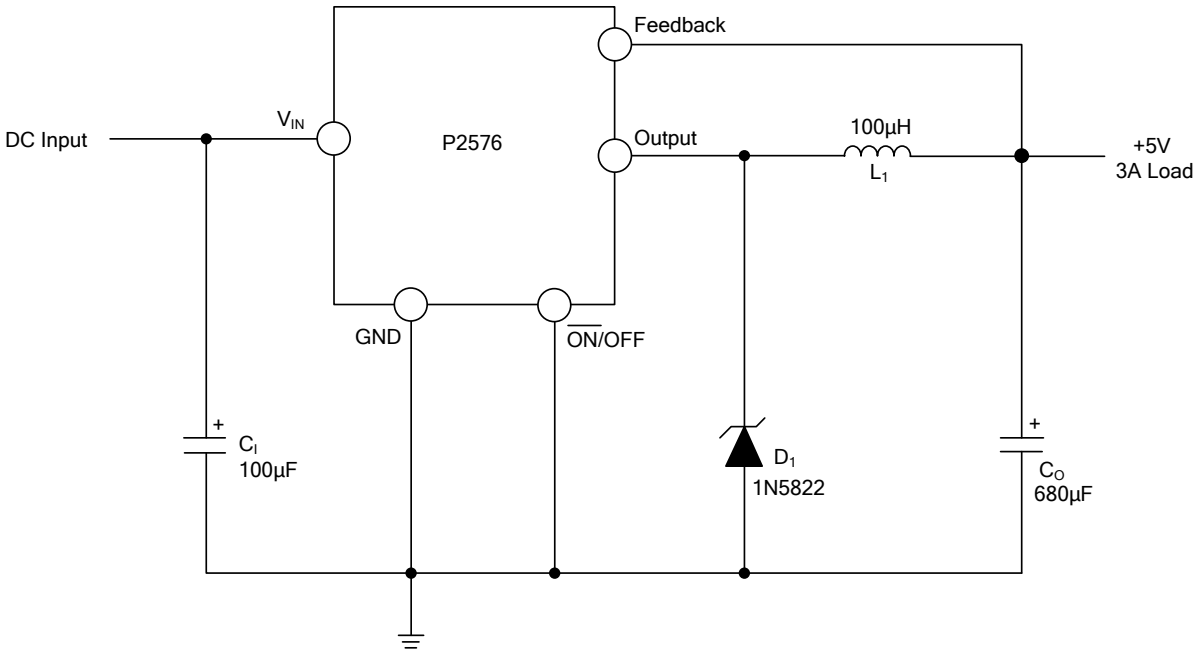

■ TYPICAL TEST CIRCUIT

Fixed Output Voltage Versions

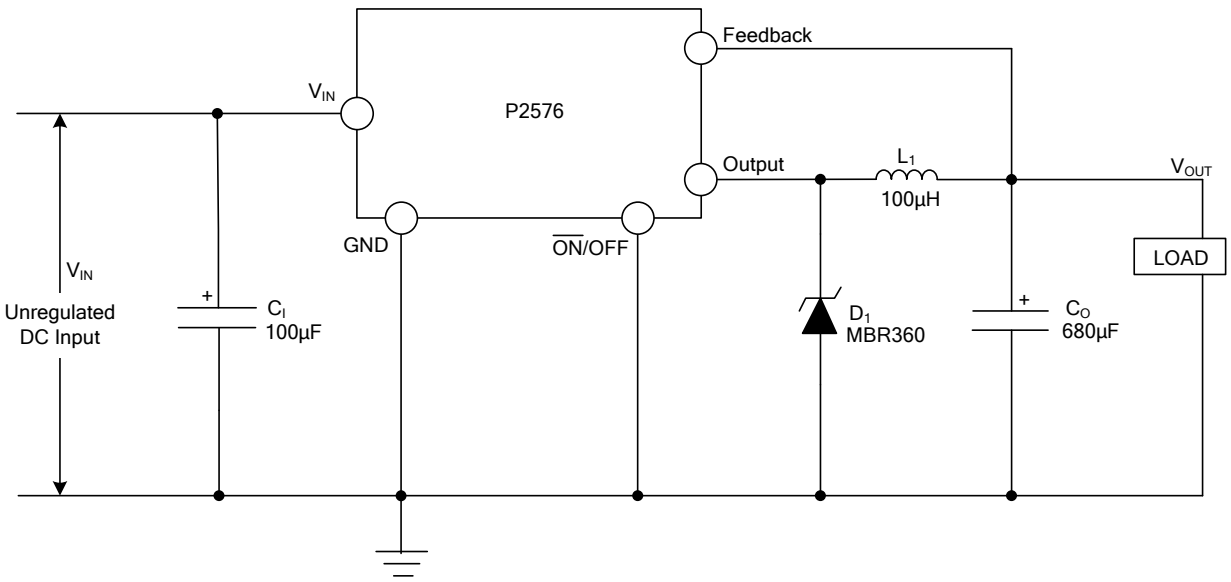

C_I : 100µF, 75V
C_O : 680µF, 25V
D_1 : Schottky, MBR360
L_1 : 100µH
R_1 : 2K, 0.1%
R_2 : 6.12K, 0.1%

Adjustable Output Voltage Versions

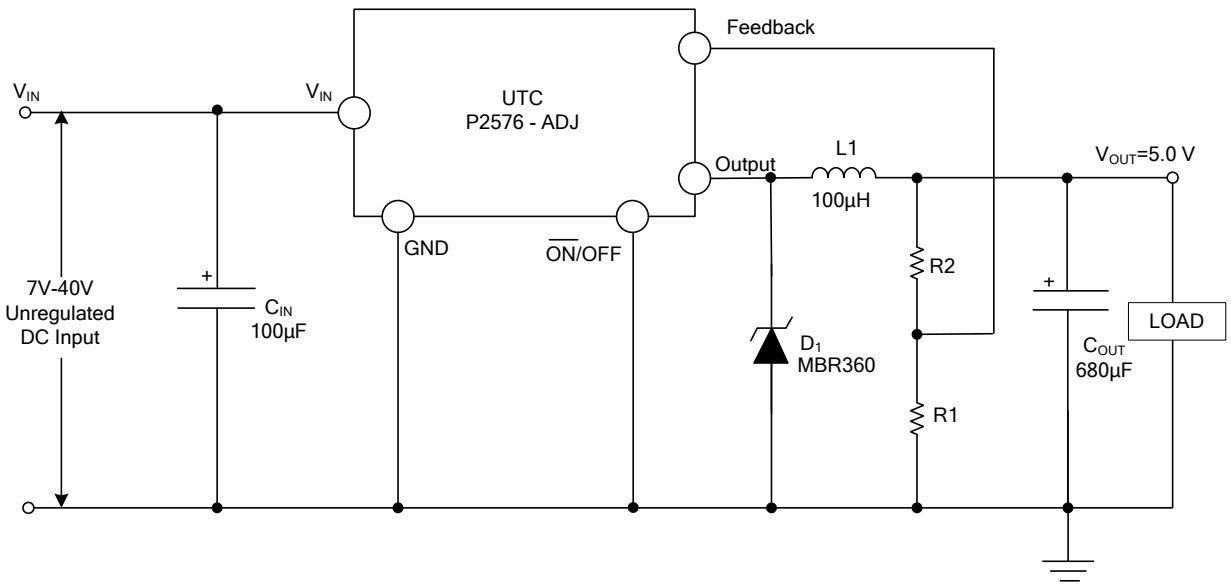

Note: $V_{OUT} = V_{REF}(1+\frac{R_2}{R_1})$

$R_2 = R_1(\frac{V_{OUT}}{V_{REF}} - 1)$

(Where V_{REF}=1.23V, R1 between 1k and 5k.)

■ TYPICAL APPLICATION CIRCUIT (T_A=25°C, V_{CC}=12V, unless otherwise specified)

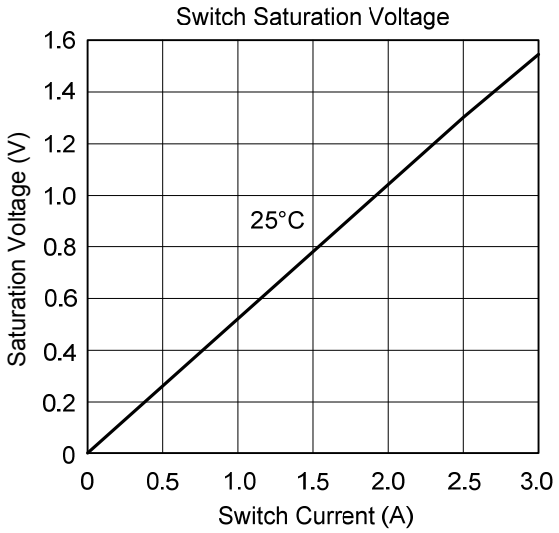

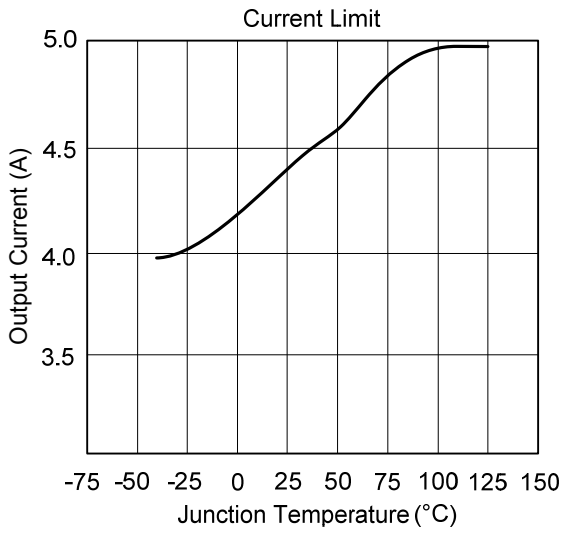

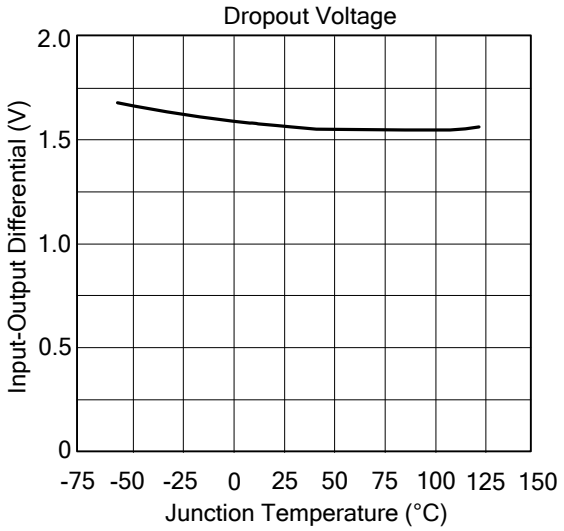

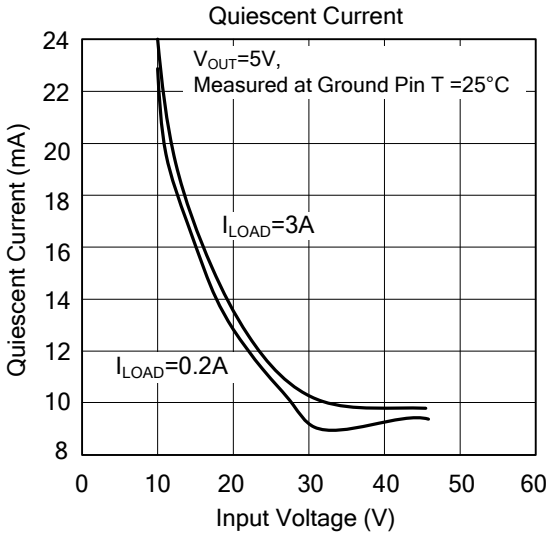

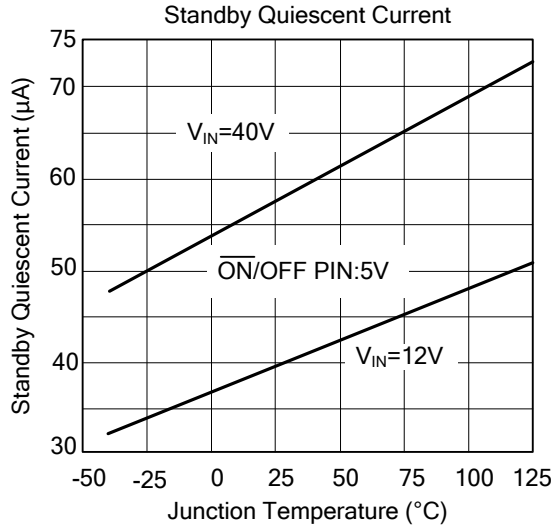

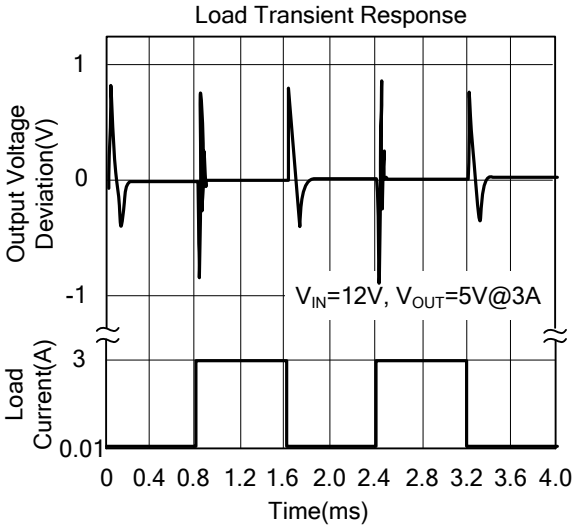

■ TYPICAL APPLICATION CIRCUIT(Cont.)

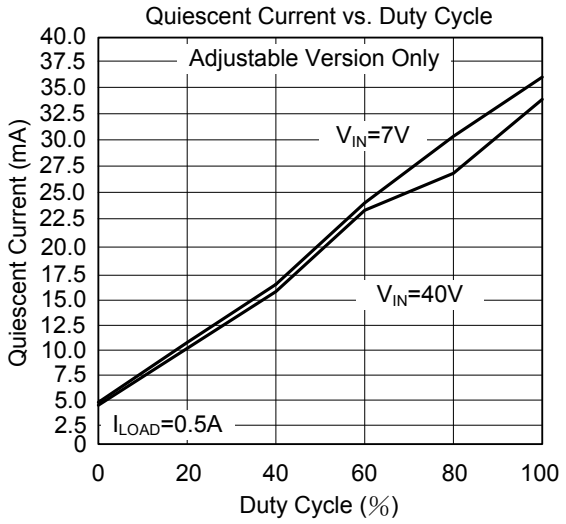

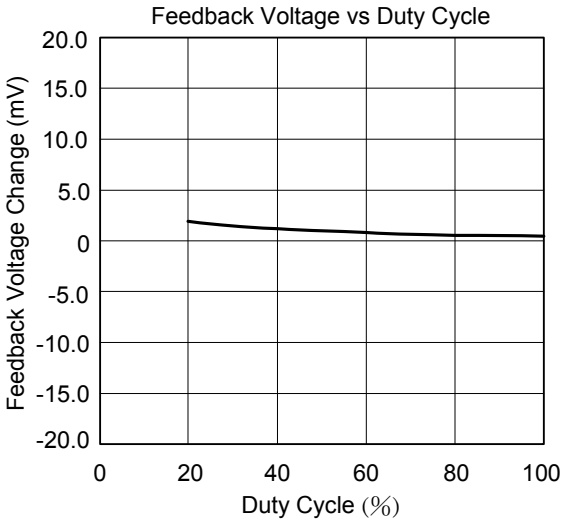

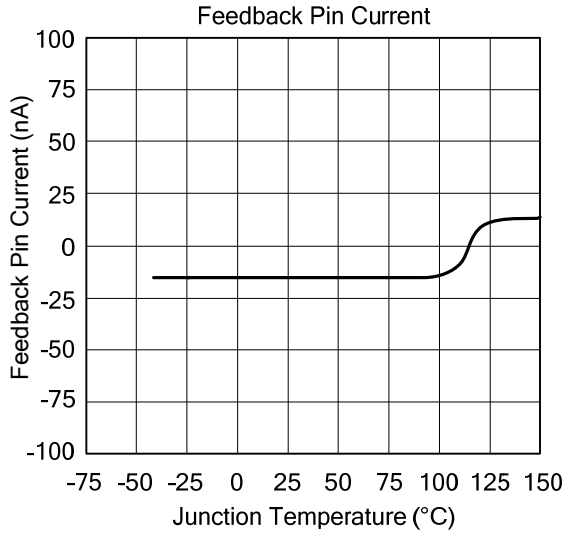

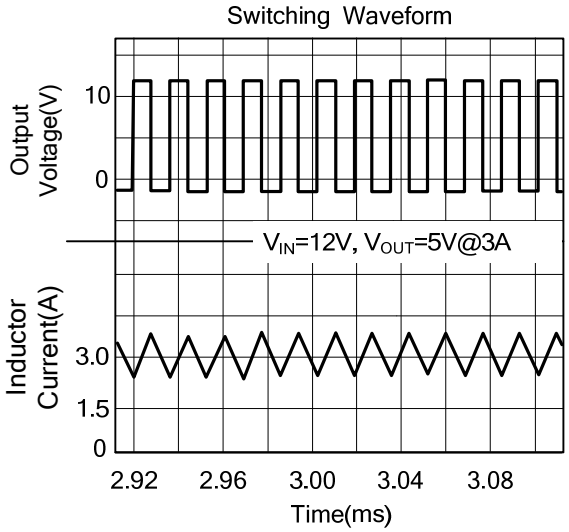

UTC assumes no responsibility for equipment failures that result from using products at values that exceed, even momentarily, rated values (such as maximum ratings, operating condition ranges, or other parameters) listed in products specifications of any and all UTC products described or contained herein. UTC products are not designed for use in life support appliances, devices or systems where malfunction of these products can be reasonably expected to result in personal injury. Reproduction in whole or in part is prohibited without the prior written consent of the copyright owner. The information presented in this document does not form part of any quotation or contract, is believed to be accurate and reliable and may be changed without notice.